The opinion in support of the decision being entered today was *not* written for publication and is *not* binding precedent of the Board.

UNITED STATES PATENT AND TRADEMARK OFFICE

BEFORE THE BOARD OF PATENT APPEALS
AND INTERFERENCES

Ex parte RICHARD C. WILSON
and
PATRICK M. CULPEPPER

Appeal No. 2006-0812
Application No. 09/391,294

ON BRIEF

Before BARRETT, MEDLEY, and MOORE, *Administrative Patent Judges*.

MOORE*, Administrative Patent Judge.*

DECISION ON APPEAL

This is an appeal under 35 U.S.C. § 134(a) from the final rejection of claims 1-2 and 4-5 of reissue application 09/391,294 of Patent 5,664,376 (08/639,698). Claims 6-23 have been cancelled. Claim 3 does not appear to be rejected, although it is not indicated to be allowable.

REPRESENTATIVE CLAIMS

The appellants have indicated (Brief, page 3) that, for the purposes of this appeal, claims 1-2 and 4 will stand or fall together. Claim 5 is urged to stand separately. Accordingly, we reproduce independent claims 1 and 5 below:

1. A support and insulating member for a corner post made of thin sheet material and used to enclose one corner of an external wall of a building, the corner post being spaced from the external wall to define a longitudinally extending hollow space therebetween, said support and insulating member comprising:

a single member having first and second longitudinally extending portions, the first portion lying in a first plane angularly disposed with respect to the second portion lying in a second plane, wherein said first and second longitudinally extending portions have lengths adapted for corresponding to the length of the corner of the building and wherein said single member defines a cornered inner surface adapted for contacting the building and a spaced apart cornered outer surface parallel to said cornered inner surface adapted for contacting the corner post;

a first support member flange lying in the first plane and extending outwardly from said first portion a predetermined distance and extending continuously along the entire length of said first portion and from said cornered inner surface radially outwardly; and

a second support member flange lying in the second plane and extending outwardly from said second portion a predetermined distance and extending continuously along the entire length of said second portion and from said cornered inner surface radially outwardly.

5. An insulating support comprising:

a single support member having first and second portions angularly disposed from each other, said first and second portions defining a cornered inner surface and a cornered outer surface parallel to said cornered inner surface, said single support member having first and second support flanges extending outwardly from the first and second portions of the single support member respectively, said first and second flanges extending continuously along the entire length of the first and second portions.

THE REFERENCE

In rejecting the claims under 35 U.S.C. § 102(b), the examiner relies upon the following single reference:

Hauck	2,091,315	Aug. 31, 1937

THE REJECTION

Claims 1-2 and 4-5 stand rejected under 35 U.S.C. § 102(b) as being anticipated by Hauck.

THE INVENTION

The invention relates to a siding corner post trim piece, filled with an insulating material.

DISCUSSION

The Rejection of Claims 1-2 and 4-5 Under 35 U.S.C. § 102 (b)

The examiner has found that Hauck describes a member having a first and second longitudinally extending portions defining a cornered inner surface each having a radially outwardly extending flange. (Rejection dated March 21, 2000, page 7, as applied to claims 1 and 5; see also Rejection dated May 3, 2000, page 7, paragraph 12).

As regards Claim 1, the appellants argue that Hauck does not show:

(i) a first support flange lying in the first plane and extending outwardly from the first portion, and

(ii) a second support member flange lying in the second plane and extending outwardly therefrom. (Appeal Brief, pages 8-9).

The support for this position appears to arise from the appellants' belief that Hauck's flanges, while extending beyond the support members, do not actually extend from them. This is said to be so because the flange is formed from a different material and therefore extends from itself, not from the member. Hauck is said to disclose a metal flange over which the wooden corner strip may be placed. (Id., page 9).

It is evident that this issue will hinge on an interpretation of the language of the claim. We, therefore, embark on our analysis with the words of the claim.

Federal Circuit precedent provides guidance with respect to the construction of claims undergoing examination. *Burlington Industries, Inc. v. Quigg*, 822 F.2d 1581, 1583, 3 USPQ2d 1436, 1438 (Fed. Cir. 1987) (claims undergoing examination are given their broadest reasonable construction consistent with the specification). We therefore shall give the claims their broadest reasonable interpretation, divining whatever guidance as is appropriate from the specification.

(i) The Preamble

The preamble of claim 1 reads as follows:

> A support and insulating member for a corner post made of thin sheet material and used to enclose one corner of an external wall of a building, the corner post being spaced from the external wall to define a longitudinally extending hollow space therebetween, said support and insulating member comprising:

Generally speaking, the preamble does not limit the claims. *DeGeorge v. Bernier*, 768 F.2d 1318, 1322 n.3, 226 USPQ 758, 764 n.3 (Fed. Cir. 1985). However, the preamble may be limiting "when the claim drafter chooses to use both the preamble and the body to define the subject matter of the claimed invention." *Bell Communications Research, Inc. v. Vitalink Communications Corp.*, 55 F.3d 615, 620, 34 USPQ2d 1816, 1820 (Fed. Cir. 1995). If the preamble is "necessary to give life, meaning and vitality" to the claim, then the claim preamble should be construed as limiting. *Kropa v. Robie*, 187 F.2d 150, 152, 88 USPQ 478, 480-81 (CCPA 1951). This is determined "on the facts of each case in view of the claimed invention as a whole." *In re Stencel*, 828 F.2d 751, 754, 4 USPQ2d 1071, 1073 (Fed. Cir. 1987); see also *Applied Materials, Inc. v. Advanced Semiconductor Materials Am., Inc.*, 98 F.3d 1563, 1572-73, 40 USPQ2d 1481, 1488 (Fed. Cir. 1996) ("Whether a preamble stating the purpose and context of the invention constitutes a limitation . . . is determined on the

facts of each case in light of the overall form of the claim, and the invention as described in the specification and illuminated in the prosecution history.”).

In the present case, it is apparent that the preamble goes to the intended use of the support and insulating member in the space between the thin sheet material and the external wall of the building. See *Boehringer Ingelheim Vetmedica, Inc. v. Schering-Plough Corp.*, 320 F.3d 1339, 1345, 65 USPQ2d 1961, 1965 (Fed. Cir. 2003) ("An intended use or purpose usually will not limit the scope of the claim because such statements usually do no more than define a context in which the invention operates."). The preamble of claim 1 describes the corner post of thin sheet material and the space defined by that corner post and the exterior wall of the building, which is the space the claimed support and insulating member will occupy. No part of the preamble, however, is necessary to understanding or defining the claimed support and insulating member.

Furthermore, where the building or corner post do appear in the claim body, it is in terms of the member being “adapted for” use with the building. See *Loctite Corp. v. Ultraseal, Ltd.,* 781 F.2d 861, 868, 228 USPQ 90, 94 (Fed. Cir. 1985) ("we interpret 'adapted to remain ... metal surfaces' as merely language of intended use, not a claim limitation").

Finally, the corner post and the building do not form a part of the claimed subject matter.

Accordingly, we conclude that the preamble is non-limiting.

Turning to the claim elements, the first is:

> a single member having first and second longitudinally extending portions, the first portion lying in a first plane angularly disposed with respect to the second portion lying in a second plane, wherein said first and second longitudinally extending portions have lengths adapted for corresponding to the length of the corner of the building and wherein said single member defines a cornered inner surface adapted for contacting the building and a spaced apart cornered outer surface parallel to said cornered inner surface adapted for contacting the corner post;

The term “single” is used in conjunction with “member.” Both terms are undefined in the specification. Both must be read together in conjunction with the specification to determine the broadest reasonable interpretation to be afforded the claim. For example, in construction a door may be a single “member” of the house, but that door may be composed of several elements affixed together (panels, windows, framing, and bracing) to create a construction “member.” In a different context/perspective, those elements of the door could also be thought of as “members.”

As used in the specification, the “member” is one of a few components which go into weatherproofing the exterior of a house – corner post (col. 3, line 26); siding panels (*Id.*, line 27); oriented strand board outer wall (*Id.*, lines 29-30); and the

claimed corner support member.

There are several meanings which can be ascribed to the term "single."

Webster's New Collegiate Dictionary (1977) gives the following meanings at page 1083:

> **single** *adj.* **1a:** not married b: of or relating to celibacy **2:** unaccompanied by others: LONE, SOLE, <the ~ survivor of the disaster> **3a (1):** consisting of or having only one part, feature, or portion <~ consonants> **(2):** consisting of one as opposed to or in contrast with many: UNIFORM <a ~ standard for men and women> **(3)** consisting of only one in number <holds to a ~ ideal> **b:** having but one whorl of petals or ray flowers <a ~ rose> **4a:** consisting of a separate unique whole: INDIVIDUAL <every ~ citizen>; **b:** of, relating to, or involving only one person **5a:** FRANK, HONEST <a ~ devotion> **b:** exclusively attentive <an eye ~ to the truth> **6:** UNBROKEN, UNDIVIDED **7:** having no equal or like: SINGULAR **8:** designed for the use of one person or family only <a ~ room>

In the context of home construction, definitions 3a and 6 appear to be the broadest reasonable interpretation – that a "single member" is one whole building member.

We recognize that this interpretation is not as narrow as a member which is "uniform throughout" or "formed from a single homogeneous piece."

The next claim elements are:

> a first support member flange lying in the first plane and extending outwardly from said first portion a predetermined distance and extending continuously along the entire length of said first portion and from said cornered inner surface radially outwardly; and

> a second support member flange lying in the second plane and extending outwardly from said second portion a predetermined distance and extending continuously along the entire length of said second portion and from said cornered inner surface radially outwardly.

We need interpret what is meant by “extending outwardly from said first portion.”

The specification uses this phrase at column 3, lines 36-38 in describing figure 1 as:

> In the preferred embodiment (FIG. 1) the corner support member 10 has two flanges 44 and 46 extending outwardly from the support member portions 36 and 38.

Figure 1 is reproduced below:[1]

[1] This figure is a cross sectional view of a corner post illustrating a thick section (36,38) in the inner corner and thinner flanges (44,46) extending outwardly. (Section 508 Compliance)

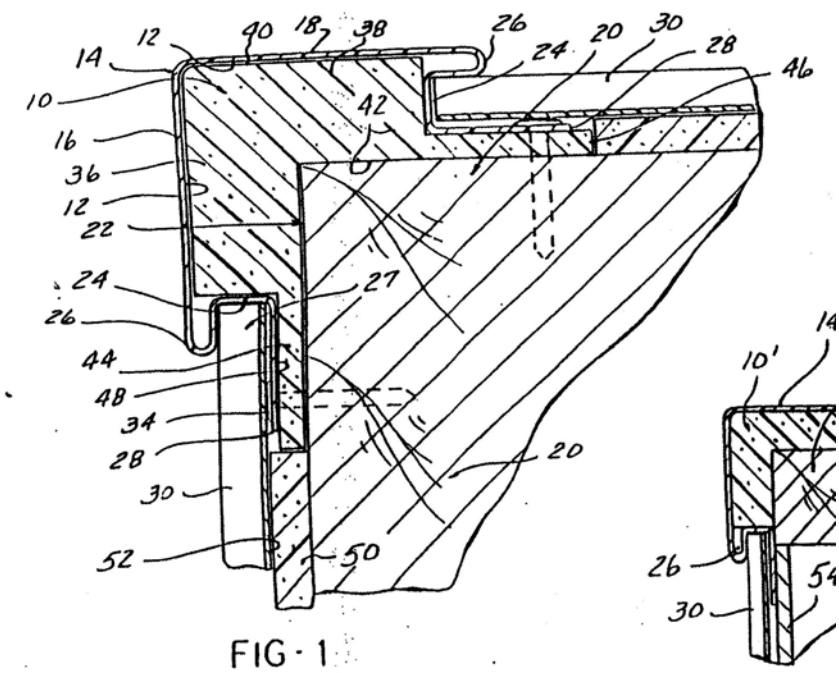

FIG-1

Each of support member portions 36 and 38 is considerably thicker than the flanges 44 and 46.

The specification does not restrict the flange to any particular portion of the cross section of the member. We therefore conclude that the flanges may protrude from any part of the cross section of the entire member.

We now turn to the crux of the matter – the appellants' sole argument raised on appeal regarding claims 1 and 5 is the contention that the "Hauck reference does not show a first [or second] support flange lying in a first plane and extending outwardly from the first [or second] portion" (Appeal Brief, page

8, lines 20-22). This is based on the appellants' argument that the flange of Hauck, while extending beyond the member, does not extend from the member as it is simply adjacent to the member. The appellants urge that the flange is made of metal while the corner is made of wood, two different materials which cannot be "a single member" (Appeal Brief, page 9, lines 4-5).

Hauck illustrates a composite building corner member with a metal flange and a corner wooden post.

Hauck Figure 1 reflects a metal corner piece covering the building sheathing in conjunction with a wooden corner piece.

Hauck Figure 1[2] is reproduced below:

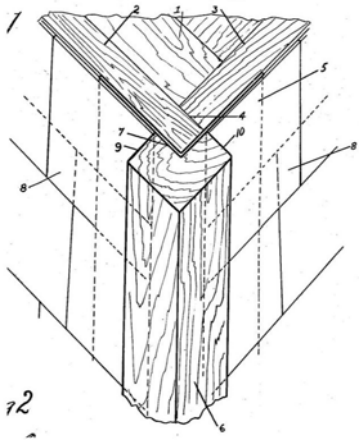

As may be seen, the Hauck metal flanges 8 and wood portion 6, when taken together, form each of the first portion and the second portion as claimed in claims 1 and 5. As discussed above, we

2 Figure 1 of Hauck shows a wooden corner post with an internal metal flange

interpret “single member” as a building member, which is inclusive of multiple components fixed together to become that member.

As such, the portions are encompassed by the perimeter of the metal flange and wooden portions of Hauck. The metal flange, while extending from itself, comprises a segment of each first and second portion, and therefore anticipates a flange extending from the portion.

Accordingly, we shall sustain this rejection as it relates to claims 1, 2, 4, and 5.

Summary of Decision

The rejection of claims 1-2 and 4-5 under 35 U.S.C. § 102(b) over Hauck is SUSTAINED.

(Section 508 Compliance).

No time period for taking any subsequent action in connection with this appeal may be extended under 37 CFR § 1.136(a).

AFFIRMED

LEE E. BARRETT Administrative Patent Judge	)	
SALLY C. MEDLEY Administrative Patent Judge	)	BOARD OF PATENT APPEALS AND INTERFERENCES
JAMES T. MOORE Administrative Patent Judge	)	

cc (via first class mail):

Andrew R. Basile, Esq.
YOUNG & BASILE PC
3001 West Big Beaver Road
Suite 624
Troy, Michigan 48084-3107