The opinion in support of the decision being entered today was *not* written for publication and is *not* binding precedent of the Board.

UNITED STATES PATENT AND TRADEMARK OFFICE

BEFORE THE BOARD OF PATENT APPEALS
AND INTERFERENCES

Ex parte HAITAO CHENG

Appeal 2006-2453
Application 10/302,391
Technology Center 1700

Decided: February 27, 2007

Before THOMAS A. WALTZ, JEFFREY T. SMITH, and LINDA M. GAUDETTE, *Administrative Patent Judges*.

GAUDETTE, *Administrative Patent Judge*.

DECISION ON APPEAL

This appeal involves claims 1-9, the only claims pending in this application.

BACKGROUND

The invention is directed to the use of flexible, chemically resistant, fast curing UV curable adhesive to reinforce fold areas and/or seams of membranes utilized in spiral filtration modules. Spiral filtration modules are used for microfiltration, nanofiltration, ultrafiltration, reverse osmosis, and gas separation. Filtration devices of this type typically comprise a plurality of spiral filtration modules through which a fluid to be filtered passes.

Figure 4 of the present specification is reproduced below:

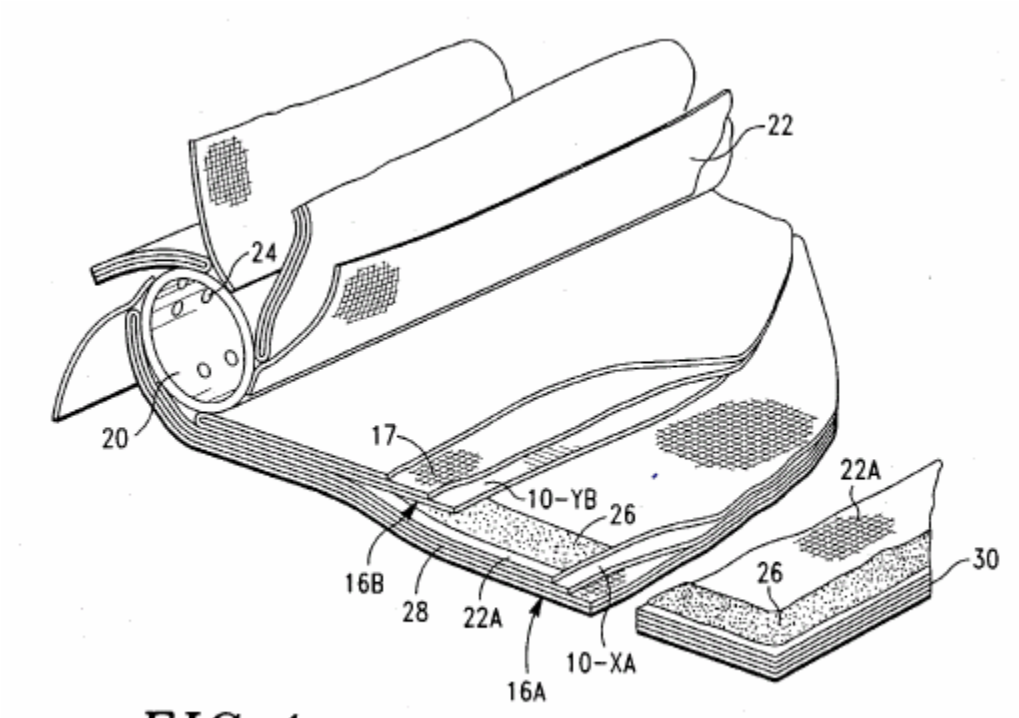

FIG. 4

Figure 4 illustrates a single spiral filtration module.

The spiral filtration module includes a permeate carrier tube 20 with leaf packets 16 circumferentially spaced around it. [0032]. A leaf packet

16 is formed by folding a membrane sheet 10 in half along its width to present two membrane leaves 10-X and 10-Y. A membrane sheet 10 comprises a membrane material integrally joined to a backing material. Sheet 10 is generally folded along a fold line such that the membrane sides are facing. A feed spacer 17 is positioned between the leaves 10-X and 10-Y. [0017].

A UV curable adhesive is applied across the width of the membrane sheet 10 along either side of the fold line prior to folding [0021] to provide fold protection without adhering the membrane leaves 10-X and 10-Y to each other [0022]. The UV curable adhesive may be applied to either the backing side or to the membrane side. [0022].
The UV curable adhesive is flexible and has a hardness with a Shore A range after curing. [0023].

The leaf packets 16 are arranged such that their fold lines are positioned adjacent to permeate carrier tube 20. [0032]. Permeate carrier envelopes are formed by positioning a permeate carrier 22A adjacent a first membrane leaf 10-XA of a leaf packet 16A. A quantity of adhesive 26 is applied along the side edges 28 and/or across the distant axial edge 30 of first leaf 10-XA and/or permeate carrier 22A. A second leaf 10-YB of adjacent leaf packet 16B is brought into contact with adhesive 26 so as to form a completed permeate carrier envelope comprised of permeate carrier 22A sealed between the two leaves 10-XA and 10-YB. The envelopes are then wound around the tube 20.

In operation, unfiltered fluid passes along the feed spacers 17 in a direction parallel to the axis of the permeate carrier tube 20, passes radially through the membrane surface of the permeate carrier envelopes,

and is directed to holes 24 in the permeate carrier tube 20. [0032]. Because the permeate carrier envelopes are sealed along the side edges 28 and distant axial edges 30, fluid can only enter from a radial direction. [0033].

Claims 1 and 6 are illustrative of the invention and are reproduced below:

1. A method of preparing a leaf packet for a spiral filtration module comprising the steps of:

providing a membrane sheet;

applying a UV curable adhesive to a surface of said membrane sheet, across the width of said membrane sheet;

exposing said adhesive to UV radiation to cure said adhesive; and

dividing said membrane sheet across the width of said membrane sheet along a line to provide first and second membrane leaves, wherein said line is within the portion of said membrane sheet to which said adhesive is applied in said applying step,

wherein said cured adhesive reinforces said membrane sheet in the area of said line.

6. A leaf packet useful in forming a spiral filtration module comprising:

a membrane sheet presenting first and second membrane leaves, wherein said first and second membrane leaves are divided by a line across the width of said membrane sheet; and

a strip of UV curable adhesive affixed to the surface of each said leaf adjacent said line, wherein said adhesive has been exposed to UV radiation to cure said adhesive, and the cured adhesive reinforces said membrane sheet in the area of said line.

The Examiner relies on the following prior art references to show unpatentability:

Bray	US 4,842,736	Jun. 27, 1989
Kobayashi	US 6,218,465 B1	Apr. 17, 2001
Cheng	US 6,433,091 B1	Aug. 13, 2002
Simonetti	US 2003/0034293 A1	Feb. 20, 2003

The Examiner made the following four grounds of rejection:

1. Claims 1, 3, 4, 6, and 7 are rejected under 35 U.S.C. § 102(e) as being anticipated by Simonetti;
2. Claims 2, 8, and 9 are rejected under 35 U.S.C. § 102(e) as anticipated by or, in the alternative, under 35 U.S.C. § 103(a) as obvious over, Simonetti;
3. Claims 6-9 are rejected under 35 U.S.C. § 102(e) as anticipated by or, in the alternative, under 35 U.S.C. § 103(a) as obvious over, Bray; and
4. Claim 5 is rejected under 35 U.S.C. § 103(a) as unpatentable over Sirnonetti.

ISSUES

1. The Examiner's contention is that Simonetti teaches a method of preparing a leaf packet for a spiral filtration module comprising applying a UV curable adhesive to a surface of the membrane at the fold line, such that the adhesive reinforces the membrane at the fold line. Appellant's contention is that Simonetti only applies adhesive where leak paths exist, i.e., along the edges of the membrane sheet and in isolated existing cracks near the membrane fold line. Appellant maintains that, in filling discrete cracks, the artisan would not apply adhesive "across the width of the membrane" nor would there be any reason for the artisan to divide the membrane sheet across its width "within the portion of said membrane sheet to which said adhesive is applied." The issue before us is whether the Examiner has established that Simonetti inherently discloses applying a UV curable adhesive across the width of the membrane sheet.

2. The Examiner's contention is that Simonetti's and Bray's adhesives would inherently provide reinforcement along the crease of the membrane sheet. Appellant's contention is that the claimed UV curable adhesive has different properties from the prior art adhesives. The issue before us is whether Appellant has provided sufficient evidence to establish that the adhesive, as claimed, patentably distinguishes over the prior art adhesives.

FINDINGS OF FACT

Claim Construction

1) "[T]he term 'UV curable' adhesive refers to a specific type of adhesive having a certain composition and properties. Specifically, a UV curable adhesive is characterized in that its chemical composition allows the adhesive to be cured by ultraviolet light or radiation." Declaration of Haitao Cheng under 37 C.F.R. § 1.132, ¶ 7.

2) The phrase "across the width" as used in the claims and specification means extending "from one side to the opposite side," as depicted in Figure 1. This definition is consistent with the manner in which adhesive is applied in the prior art to reinforce the fold line (s*ee* Bray, Fig. 8 and col. 6, ll. 12-23) and with the ordinary meaning of "across" (*see, e.g. Webster's Third International Dictionary, unabridged*)

The Prior Art

3) Simonetti describes a filter element and method of manufacture in which an undesired fluid flow path through the filter element is blocked. Abstract.

Figure 1 of Simonetti is reproduced below:

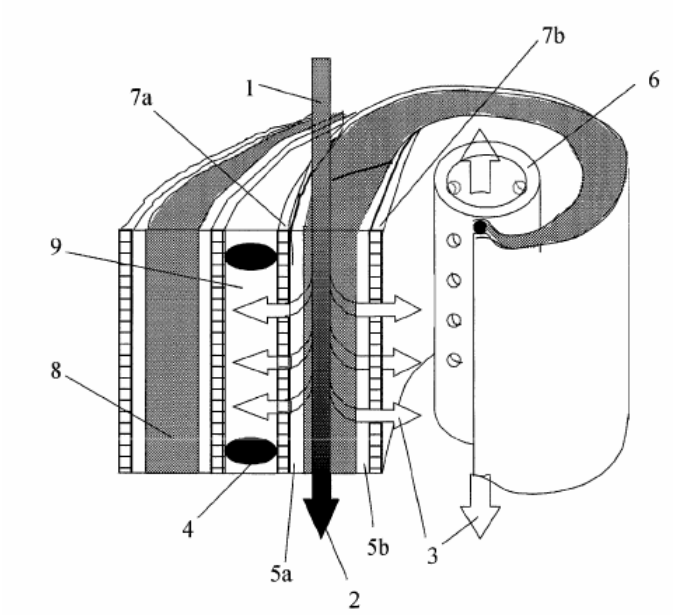

4) Simonetti Figure 1 illustrates a dual-leaf spiral wound filter element.

> The unfiltered feed flow 1 may enter the filter element from one end . . . along the desired flow path shown. . . . The permeate 3 may exit the filter element through the permeate outlet tube 6 around which envelopes incorporating the filter membrane (5a, 5b) and backing material (7a, 7b) may be wrapped. For outlying filter membrane envelopes, the permeate may be transported to the permeate outlet tube 6 by the fabric sheet 9 to which the backing material (7a, 7b) . . . is adhered. [0009].

5) Simonetti teaches that an envelope is created "by folding a composite sheet of filter membrane (*5a, 5b*) and backing material (*7a, 7b*) around the feed spacer material **8**." [0010].

6) A crease is formed at the fold in the membrane, when it is folded to make the envelope. *See* [0012] and claim 54.

7) Simonetti discloses applying an adhesive 4, such as a polyurethane or an epoxy along a "glue line" which generally runs along the portions of the fabric sheet 9 and backing material (7a, 7b) near the feed inlet

and concentrate outlet ends of the filter element [0010] to prevent unfiltered feed fluid from entering the fabric sheet or backing material directly through a cross-section [0003].

8) Figure 2 of Simonetti is reproduced below:

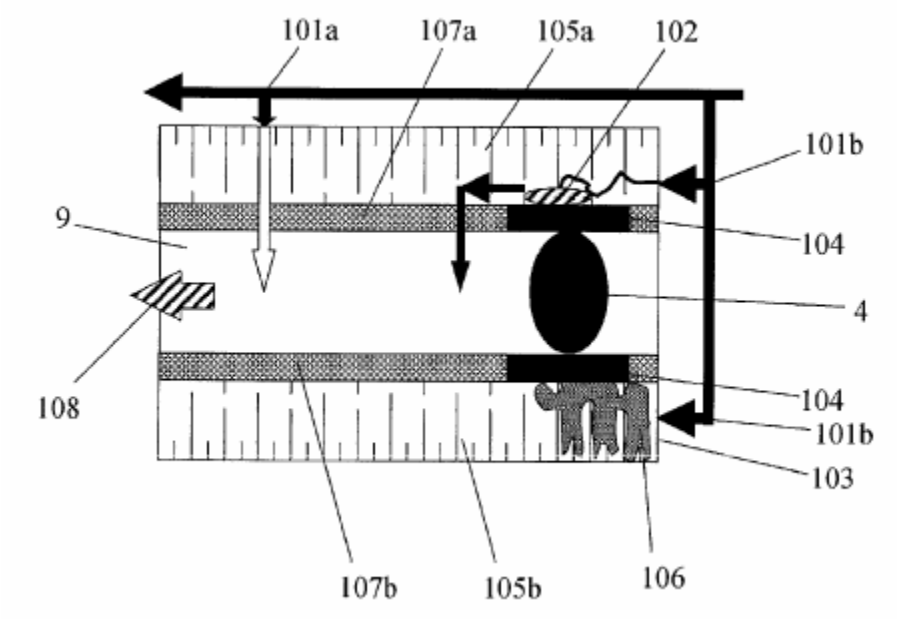

9) Simonetti Figure 2 illustrates a portion of the filter element of Simonetti Figure 1 that lies between two filtration envelopes [0011].

10) The desired flow path 101a is substantially parallel to the surface plane of the filter membrane and through the filter membrane 105a and fabric sheet 107a. [0012].

11) Simonetti teaches that some unfiltered feed flow may also travel along the lateral flow path 101b and enter the filter membrane 105a through its cross-sectional surface “at either of the ends of the filter element or at cracks in the filter element, e.g., those that tend to form near the crease in an envelope." [0012]. As a result, feed flow along the lateral flow path 101b may avoid filtration through filter membrane

105a and contaminate the permeate flow being transported by fabric sheet 9. [0012].

12) To avoid this problem, Simonetti applies a substance 106 to the cross-sectional face 103 of the membrane sheet "at which the lateral flow path **101***b* of unfiltered feed flow would begin" to seal the pores along the edges and thus block the "inlet of unfiltered feed fluid along the lateral flow path **101***b*" [0013].

13) In addition, Simonetti discloses applying the substance 106 to "cracks [that] may appear in a portion of the filter membrane **105***b* near the crease in an envelope of filter membrane material or near the permeate outlet tube." [0020].

14) Simonetti does not state that the substance used along the edges and at discrete cracks reinforces the membrane.

15) Simonetti does not specifically state whether the substance 106 is applied to cracks which form prior to winding the membranes around the permeate tube.

16) Substance 106 may be a UV curable adhesive. [0015].

17) Bray relates to improvements in spiral wound membrane cartridges for use in ultrafiltration and, more particularly, to:

> sealing and/or reinforcement about the area of the fold on the membrane sheet, so that in the event of crack formation in the membrane at the fold, the feed fluid cannot have access to the permeate carrier tube thereby contaminating the permeate. Col. 5, ll. 52-57.

18) Bray discloses that the sealing means used for reinforcement is an adhesive, preferably polyurethane glue. Col. 6, ll. 10-11.

19) Bray also discloses that adhesives used to bond the materials used in the cartridges may be polyurethanes, epoxy resin formulations and "other polymeric adhesives such as those which are polymers or copolymers of vinyl resins." Col. 5, ll. 45-50.

20) Dr. Haitao Cheng, the named inventors in the present application, testified that prior to November 22, 2002, the filing date of the present application, "conventional wisdom held that single-component UV-cured adhesives were generally weaker, less flexible, and less chemically resistant than two-component heat-cured adhesives." Cheng Declaration, ¶ 7.

21) Dr. Cheng further testified:

> At the time the invention disclosed in the subject application was made, to my knowledge, known UV curable adhesives would not have been suitable for use in fold protection in spiral filtration modules. Specifically, known UV curable adhesives did not have the combination of flexibility, hardness and chemical resistance required for such applications. More specifically, known UV curable adhesives did not combine flexibility, hardness in the Shore A range and resistance to chemicals selected from the group consisting of chlorine, acidic cleaning solutions and caustic cleaning solutions. [Cheng Declaration, ¶ 4.]

22) At the time of making his declaration on November 22, 2004, Dr. Cheng had been employed in research and development of filtration modules for three years. Cheng Declaration, ¶ 2. At the time of making his declaration, Dr. Cheng was qualified to testify as to the

level of knowledge in November 2002 of one of ordinary skill in the art of filtration modules.

23) According to Dr. Cheng,

> polyurethane adhesives are a different type of adhesive. Polyurethanes are formed through the reaction of an isocyanate component with amines, polyols, or other active hydrogen compounds, Polyurethane adhesives require a catalyst, heat or air evaporation to initiate complete curing. Thus, polyurethane adhesives are different in composition and property from UV curable adhesives. [Cheng Declaration, ¶ 8.]

PRINCIPLES OF LAW

1) Anticipation under 35 U.S.C. § 102(e) requires that "each and every element as set forth in the claim is found, either expressly or inherently described, in a single prior art reference." *In re Robertson*, 169 F.3d 743, 745, 49 USPQ2d 1949, 1950 (Fed. Cir. 1999).

2) The Examiner bears the initial burden of establishing a prima facie case of anticipation. *In re King*, 801 F.2d 1324, 1326-27, 231 USPQ 136, 138 (Fed. Cir. 1986).

3) A determination that a claim is anticipated involves two analytical steps. First, the Board must interpret the claim language, where necessary. Second, the Board must compare the construed claims to a prior art reference to determine whether each and every limitation is found either expressly or inherently in that reference. *In re Crish*, 393 F.3d 1253, 1256, 73 USPQ2d 1364, 1366-67 (Fed. Cir. 2004).

4) Claim language must be read in light of the specification as it would be understood by one of ordinary skill in the art, keeping in mind that broad claim terms should not be limited solely on the basis of specification passages. *In re Bigio*, 381 F.3d 1320, 1324-25, 72 USPQ2d 1209, 1211 (Fed. Cir. 2004).

5) Under the principles of inherency, if the prior art necessarily functions in accordance with, or includes, the claimed limitations, it anticipates. *MEHL/Biophile Intern. Corp. v. Milgraum*, 192 F.3d 1362, 1365, 52 USPQ2d 1303, 1305-06 (Fed. Cir. 1999) (*citing In re King*, 801 F.2d 1324, 1326, 231 USPQ 136, 138 (Fed. Cir. 1986)).

6) Inherency may not be established by probabilities or possibilities, i.e., the mere fact that a certain thing may result from a given set of circumstances is not sufficient. *In re Oelrich*, 666 F.2d 578, 581, 212 USPQ 323, 326 (CCPA 1981).

7) The examiner bears the initial burden of establishing a prima facie case of obviousness. *In re Kumar*, 418 F.3d 1361, 1366, 76 USPQ2d 1048, 1051 (Fed. Cir. 2005).

8) To support a rejection on obviousness grounds, the examiner must provide a detailed analysis of the prior art and reasons why one of ordinary skill in the art would have possessed the knowledge and motivation to make the claimed invention. *See In re Kahn*, 441 F.3d 977, 988, 78 USPQ2d 1329, 1336 (Fed. Cir. 2006).

9) "The mere fact that the prior art may be modified in the manner suggested by the Examiner does not make the modification obvious unless the prior art suggested the desirability of the modification." *In*

re Fritch, 972 F.2d 1260, 1266, 23 USPQ2d 1780, 1783-74 (Fed. Cir. 1992).

10) Once the PTO has made an initial determination that specified claims are not patentable (the prima facie case concept, *see In re Oetiker*, 977 F.2d 1443, 1448, 24 USPQ2d 1443, 1447 (Fed. Cir. 1992) (Plager, J. concurring)), the burden of production falls upon the applicant to establish entitlement to a patent. *See In re Spada*, 911 F.2d 705, 708, 15 USPQ2d 1655, 1658 (Fed. Cir. 1990).

11) The Board has broad discretion as to the weight to give to declarations offered in the course of prosecution. *See Velander v. Garner*, 348 F.3d 1359, 1371, 68 USPQ2d 1769, 1778 (Fed. Cir. 2003)

12) "Although there is 'no reason why opinion evidence relating to a fact issue should not be considered by an examiner,' *In re Alton*, 76 F.3d 1168, 1175 n. 10 (Fed.Cir.1996), the Board is entitled to weigh the declarations and conclude that the lack of factual corroboration warrants discounting the opinions expressed in the declarations." *In re American Academy of Science Tech Center*, 367 F.3d 1359, 1368, 70 USPQ2d 1827, 1833 (Fed. Cir. 2004).

ANALYSIS AND CONCLUSIONS

Simonetti

Claims 1-5:

Appellants argue, inter alia, that Simonetti does not disclose applying a UV curable adhesive across the width of the membrane sheet. Br. 7. Rather, Simonetti's application of the adhesive is limited to leak paths, i.e., along the edges of the membrane sheet and in isolated existing cracks near

the membrane fold line. Br. 7. The Examiner argues that applying the substance along the fold (or crease) is implied in Simonetti. Answer 13-14. According to the Examiner, sealing the cracks at the crease as taught by Simonetti is possible only before winding the membranes around the permeate tube, and Bray evidences that it is known in the art to seal the fold of the membrane with a flexible adhesive prior to winding to prevent cracks. Answer 10.

As pointed out by Appellants, the Examiner has failed to provide evidentiary support for his contention that Simonetti's application of UV curable adhesive is necessarily made prior to the formation of cracks. Simonetti specifically states that "cracks may appear" and "cracks may be sealed," which suggests that the UV curable substances is applied only to those specific areas of the membranes in which cracks have formed after assembly of the filtration module. Br. 11. Moreover, even if the Examiner's assumption were correct, the Examiner has not established that the only known method of preventing cracks is to apply adhesive "across the width" of the membrane.

Because inherency may not be established by probabilities or possibilities, we conclude that the Examiner has failed to establish a prima facie case of anticipation of claims 1-4 which include the step of "applying a UV curable adhesive to a surface of said membrane sheet, across the width of said membrane sheet." We further conclude that the Examiner has failed to establish a prima facie case of obviousness as to claims 2 and 5, since the Examiner has failed to identify, in Simonetti, any motivation, teaching or suggestion to extend the application of a UV curable adhesive beyond those areas in which cracks have formed to cover "the width" of the membrane.

Claims 6-9:

Appellants argue that Simonetti fails to disclose a leaf packet wherein the membrane sheet has been reinforced in the area of the crease by a strip of UV cured adhesive. Br. 14. The Examiner argues that Simonetti's adhesive would "inherently provide such reinforcement." Answer 10. Appellants' position is supported by the Declaration of Dr. Cheng, which we find persuasive in establishing that the UV cured adhesive, as claimed, patentably distinguishes over Simonetti's adhesive. The Examiner has not provided an adequate explanation as to why Dr. Cheng's statements are not sufficient proof that Simonetti's leaf packet would not necessarily or inherently possess the characteristics of the claimed leaf packet. We conclude that the Examiner has failed to establish a prima facie showing that the claims are anticipated by or unpatentable over Simonetti.

Accordingly, we reverse the rejections of claims 1, 3, 4, 6, and 7 under 35 U.S.C. § 102(e) as anticipated by Simonetti; claims 2, 8, and 9 under 35 U.S.C. § 102(e) as anticipated by or, in the alternative, under 35 U.S.C. § 103(a) as obvious over, Simonetti; and claim 5 under 35 U.S.C § 103(a) as unpatentable over Simonetti.

Bray

Claims 6-9:

The Examiner argues that Bray teaches the leaf packet as claimed in claim 6 having an adhesive to reinforce the fold line. Answer 6. According to the Examiner, the claim limitation of the adhesive being UV curable is a process limitation and the patentability of the claimed leaf packet does not depend on its method of production. Answer 6. The Examiner has, however, apparently disregarded the claim limitation requiring a UV-cured

adhesive. We find Dr. Cheng's declaration persuasive in distinguishing the claimed UV cured adhesive from the prior art adhesives. The rejection of claims 6-9 under 35 U.S.C. § 102(e) as anticipated by or, in the alternative, under 35 U.S.C. § 103(a) as obvious over, Bray is reversed.

REVERSED

hh

STINSON MORRISON HECKER LLP
ATTN: PATENT GROUP
1201 WALNUT STREET, SUITE 2800
KANSAS CITY, MO 64106-2150