The opinion in support of the decision being entered today is *not* binding precedent of the Board.

UNITED STATES PATENT AND TRADEMARK OFFICE

BEFORE THE BOARD OF PATENT APPEALS
AND INTERFERENCES

Ex parte DENNIS R. FREEMAN,
NEIL P. REDDEN, and STEVEN A. VAN SLYKE

Appeal 2007-1170
Application 10/971,698[1]
Technology Center 1700

Decided: 20 June 2007

Before ADRIENE LEPIANE HANLON, ROMULO H. DELMENDO, and MARK NAGUMO, *Administrative Patent Judges*.

NAGUMO, *Administrative Patent Judge*.

DECISION ON APPEAL

A. Introduction

Applicants ("Freeman") appeal under 35 U.S.C. § 134 from the final rejection of claims 1–18, all of the pending claims in their application. We

---

[1] Application filed 25 October 2004. The real party in interest is identified as Eastman Kodak Co. (Br. at 2.)

have jurisdiction under 35 U.S.C. § 6(b). For the reasons given *post*, we AFFIRM but denote our affirmance as a new ground of rejection.

The claimed invention relates to a sample evaporation container. Although not so limited in the independent claims, the device is disclosed to be used to evaporate an organic material and to deposit the vapor as a relatively uniform film on an organic light emitting device ("OLED") substrate in a vacuum chamber.

The Examiner rejected claims 1–18 as obvious over the combined teachings of:

Freeman	US 2003/0,168,013 A1	11 September 2003
Spahn	US 6,237,529 B1	29 May 2001
Hanson	US 3,446,936	27 May 1969
Shen	US 2,793,609	28 May 1957

B. Findings of Fact

<u>The 698 disclosure</u>

1. Application 10/971,698 ("Specification") was filed on 25 October 2004, as a continuation-in-part of original application 10/093,739, which was filed 8 March 2002, now abandoned.

2. According to the Specification, "a need exists for a thermal physical vapor deposition apparatus that efficiently produces a uniform coating on a variety of substrate materials." (Specification at 4:30–31.)

3. The Specification explains that prior solutions achieved more uniform vapor deposition by, for example, eliminating spatter from the evaporating

source by placing a baffle between the source and the exit aperture (Specification at 3:1-9); by placing the substrate as close as possible to the source material (*id.* at 4:18-20); or by using only the central portion of the evaporated material (*id.* at 4:23-29).

4. According to the Specification, the prior art equipment and methods are inefficient in that they require a significant excess of substrate, vaporized material, and heating. (Specification at 4:26–29.)

5. Thus, the Specification discloses an apparatus intended to overcome the prior art deficiencies, especially the inefficient use of material and power. (Specification at 5:2–6.)

6. The invention is conveniently described in conjunction with Figure 15, which is shown below:

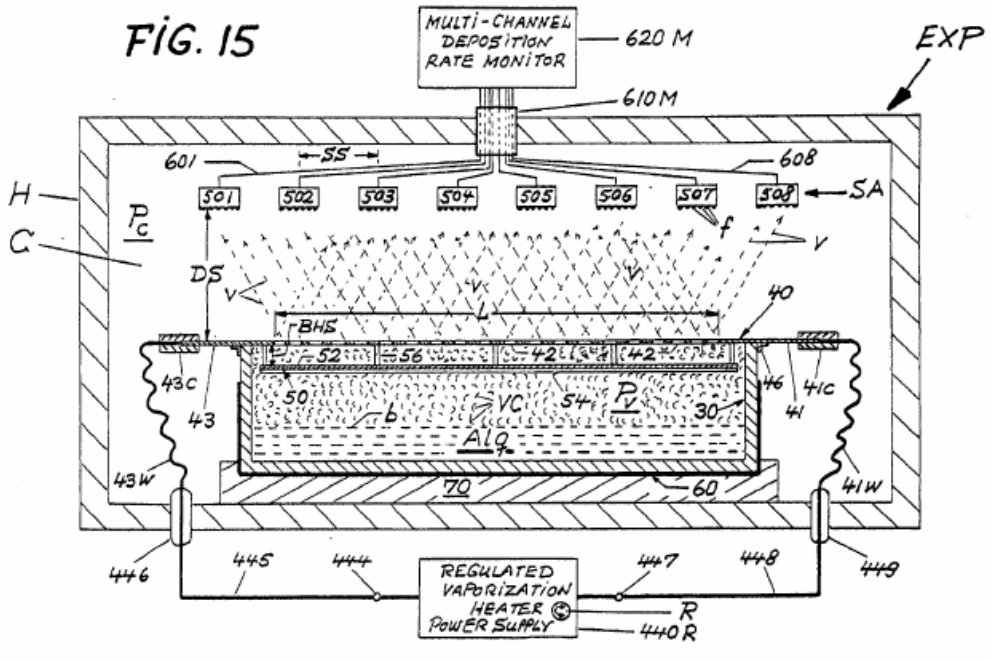

{Specification Figure 15 is said to depict the claimed container.}[2]

7. The specification teaches that the large chamber, **C**, is evacuated to a pressure typically less than about 10^{-3} torr (0.133 Pascal). (Specification at 10:26–27.)

8. Chamber **C** holds a substrate (here, **501**–**508** are sensors to measure the amount of vapor deposited on the substrate at each position) and a heatable container, **30**. (Specification at 25:7–21.)

[2] The sentences in curly braces following diagrams have been provided to comply with Section 508 of the U.S. Rehabilitation Act; they are not part of the Decision.

9. The claimed container, **30**, holds a charge of solid organic material, **Alq** (in embodiments, an organoaluminum chelate). (Specification at 13:4-7.)

10. The container **30** is covered by a heater **40**, which has a number of apertures **42**. (Specification at 13:22.)

11. The heater vaporizes the charge of organic material, forming a cloud, **VC**, at a pressure $\mathbf{P_v}$ greater than the pressure of the evacuated chamber, $\mathbf{P_c}$. (Specification at 25:28 to 26:3.)

12. A solid baffle **50** is interposed between the charge of organic material **Alq** and the apertures **42** at a selecting spacing, **BHS**. (Specification at 13:11–14.)

13. According to the specification, the baffle **50** provides:

> uniform conductance or, in other words, normalization of the vapor flow out of the efflux apertures **42** of the vaporization heater **40**. The size and spacing of baffle member **50** with respect to the heater cover surface and apertures **42** creates a tortuous path of conductance or vapor flow between efflux apertures **42** and solid material **13**, causing vapor rising from the heated solid material below to flow around the edges of the rectangular baffle member before reaching the apertures and escaping therefrom.

(Specification at 13:2–32.)

14. In particular, the Specification teaches that the baffle is positioned so "[t]he spacing between the baffle and heater cover is made small enough that a preponderance of the enclosed interior volume of the container * * * lies below the baffle." (Specification at 13:32 to 14:3.)

15. The effect of positioning the baffle in this manner is said to be that, "the vapor efflux pressure has an opportunity to equilibrate prior to the vapor efflux reaching and circumventing the baffle. This pressure equalization allows the vapor flow to uniformly exit the efflux apertures **42.**"
(Specification at 14:4.)

16. According to the Specification, the technical reason for this effect is:

> Essentially, the narrow passage permitting vapor to flow from around the edges of the baffle member into the region above the baffle causes a pressure difference (a pressure drop resulting from a restriction) that produces a more uniform flow into the region above the baffle (i.e., between the baffle and cover) and, consequently, a more uniform vapor efflux emission across the array of apertures.

(Specification at 14:5–9.)

17. The Specification teaches that to achieve this effect, "the ratio of the interior volume of the container to the volume of the region between the baffle member **50** and heater cover **40** should be at least approximately 20 to 1."
(Specification at 14:10-12.)

18. The Specification emphasizes that "any volume ratios and baffle spacings capable of producing substantially uniform vapor flow into the region of the apertures are considered to be within the scope of the invention." (Specification at 14:30–32.)

19. The Specification provides a specific example, in which the interior length of the source container is 498 mm, the interior width dimension is 36 mm, and the interior height dimension is 46 mm, resulting in an overall interior volume of 824.7 cm^3. (Specification at 14:14–17.)

20. In the examples, the baffle is spaced 2 mm from the cover, and the baffle has a length of 478 mm and a width of 25 mm, resulting in a volume of 23.9 cm^3 between the baffle and the heater cover. (Specification at 14:18–20.)

21. The ratio of the internal volume of the container to the volume between the baffle and the cover (neglecting the volume of the baffle and supports) is said to be 34.5:1. (Specification at 14:21–22.)

22. In this example, the interior length of the container is about 1.05× the length of the baffle, and the interior width of the container is about 1.8× the width of the baffle.

23. The Specification concludes with two "Comparative Examples" and three Examples, with graphs (Figures 16 and 17) of "normalized deposition rates" as measured by the sensors **501** to **508** shown in Figure 15.

24. As these Examples appear to be the same as the Examples in Freeman 013, we shall describe them in the context of that disclosure, *infra*.

25. Claim 1 reads:

> A container for vaporizing a solid material to form a layer on a surface of a structure in a chamber, comprising:
>
> > a housing for receiving the solid material to be vaporized, the housing including at least side walls, a bottom wall, and a cover enclosing an interior volume of the housing,
> >
> > > the cover including a plurality of apertures arranged to permit egress of vapor efflux of vaporized material from the housing;
> >
> > a heater for heating at least a portion of the housing to vaporize the solid material; and

> a baffle without openings disposed between the cover and the solid material to prevent a direct line of sight between the solid material and the plurality of apertures,
>
> > the baffle being spaced from the cover to control a flow of vaporized material into a region between the baffle and the cover to promote uniformity of the vapor efflux from the plurality of apertures,
>
> wherein a ratio of the interior volume of the housing to a volume of the region between the baffle and the cover is at least approximately 20:1.

(Br. at 18 (claims appendix); Paragraphing and indentation added.)

Freeman 013

26. The parent application, 10/093,739, filed 8 March 2002, was published on 11 September 2003, as US 2003/0,168,013 A1, and is now abandoned ("Freeman 013").

27. The disclosure of Freeman 013 appears to be substantially the same as that of the 698 Specification but for the descriptions of the relative volumes and the mechanisms and effects of the baffle on the gas distribution.

28. In particular, the Examples section of Freeman 013 at 8:[118][3] through 10:[150] appears to be the same or substantially the same as the Examples section of the 698 Specification at 24:7 through 29:13.

[3] Citations to Freeman 013 have the form page:[paragraph].

29. As seen in Figure 16, shown below,

FIG. 16

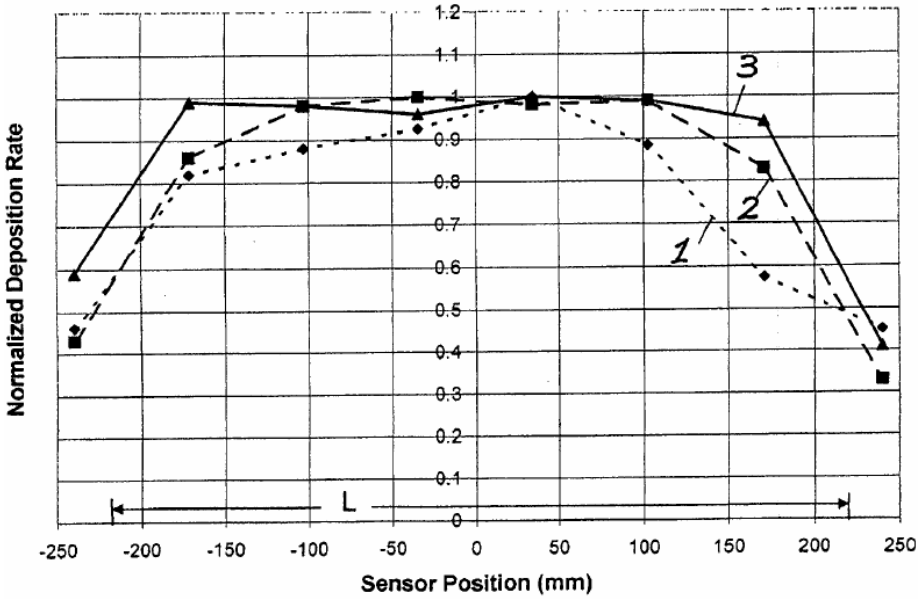

{Freeman 013 Figure 16 is said to depict the normalized deposition rate of Examples 1–3.}

the deposition rates are more uniform across the sample in Example 3 than across the samples in Comparative Examples 1 and 2.

30. According to the Freeman 013, "the uniformity over the central 300 mm portion, the region that the source was designed for, is extremely good." (Freeman 013 at 28:30-31.)

31. In Example 4, the powder charge was "substantially distributed towards one end wall of the container." (Freeman 013 at 27:20-23.)

32. Figure 17 shows that the normalized deposition rate for Example 4 is similar to that for Example 3, i.e., the trace labeled "3" in Figure 16.

33. According to the Freeman 013:

> the findings of Example 4 appear to support the belief that a vapor cloud **VC** is formed uniformly throughout the space between the baffle member **50** and the container **30** wherein the

> formation of the vapor cloud is caused by a vapor pressure P_v of vaporized **Alq** which is significantly higher than a reduced pressure $\mathbf{P}_c$ in the chamber **C**.

(Freeman 013 at 10:[0149] (emphasis added).)

Other references

34. We find no need to describe the other references separately.

The rejection

35. The Examiner finds, and Freeman does not dispute, that Freeman 013 is available as prior art under 35 U.S.C. § 102(b) against the Specification. (Answer at 5–6.)

36. The Examiner finds that Freeman 013 discloses all structures and properties required by the claims on appeal but for the ratio of the interior volume of the housing to the volume between the baffle and the cover. (Answer at 5.)

37. The Examiner finds that Spahn teaches that the placement of an internal baffle between the source of the evaporating material and the exit slit of the evaporation container is an important variable in the design of vapor deposition devices such as those taught by Freeman 013, Hanson, and Shen. (Answer at 6.)

38. The Examiner finds that the placement of the internal baffle is recognized in the art as a result-effective variable and concludes that the placement of the baffle close to the aperture such that the recited volume ratio is met would have been obvious. (Answer at 6.)

Applicants' response

39. Freeman does not argue for the separate patentability of any of the claimed subject matter. (Br. at 10–15.)

40. Freeman contends that none of the references provide any guidance relevant to promoting uniformity of vapor efflux from apertures in a deposition source, and that none of the references provide any guidance as to ratios of volumes as recited in the claims on appeal. (Br. at 10-15.)

41. In particular, Freeman urges that Spahn describes only relations among various linear dimensions of the container, and that Spahn does not describe relations between volumes. (Br. at 13.)

42. Similarly, Freeman urges that neither Shen nor Hanson provides any teaching relevant to volumes. (Br. at 14.)

43. Finally, Freeman argues that none of the secondary references provide any teachings for optimizing efflux from a container providing a plurality of apertures. (Br. at 15.)

44. Freeman concludes that the Examiner's rejection over Freeman 013, Spahn, Shen, and Hanson should be reversed. (Br. at 15-16.)

C. Discussion

The burden on appeal is on the appellant, as the movant, to demonstrate reversible error in the position taken by the Examiner.

As Freeman has not argued for the separate patentability of any claim, we need consider only claim 1. We reproduce the critical limitations of claim 1 here:

> A container for vaporizing a solid material to form a layer on a surface of a structure in a chamber, comprising:
>
> a housing * * * a cover * * *
>
> including a plurality of apertures * * *; and
>
> a baffle without openings disposed between the cover and the solid material to prevent a direct line of sight between the solid material and the plurality of apertures,
>
> the baffle being spaced from the cover to control a flow of vaporized material into a region between the baffle and the cover to promote uniformity of the vapor efflux from the plurality of apertures,
>
> wherein a ratio of the interior volume of the housing to a volume of the region between the baffle and the cover is at least <u>approximately</u> 20:1.

(Emphasis added.)

The Examiner found, and Freeman does not dispute, that Freeman 013 discloses the structures and elements, generally disposed with respect to one another as required by the claims, but for the volume-ratio requirement and the accompanying discussion of the flow of the vaporized material. The Examiner found further that the position of the baffle was recognized to be a result-effective variable, and that the invention would have been an optimization within the ordinary skill of the art, and therefore obvious.

Freeman's argument that the references provide no teachings or guidance as to the ratio of volumes recited in the appealed claims is not supported by the references themselves. Freeman 013 states that "lateral device dimensions can be in a range of 50–500 millimeter[s]," but does not disclose the length of the baffle, the interior length of the container, the interior width of the container, or the interior depth of the container. However, Freeman 013 discloses that length of the aperture (or the total

length of the apertures, when there were more than one) was 440 mm in order to obtain a uniform deposition over a 300 mm long deposition region. (Freeman 013 at 9:[122].) Freeman 013 discloses further that the baffles were 20 mm wide and spaced 2 mm from the cover. (Freeman 013 at 9:[123].) Thus, taking the lateral dimensions of the container to be slightly larger than the baffle (to permit the vapor to reach the apertures and to permit easy access and manipulation of the components), we may obtain an estimate of the minimum value of the ratio of the container volume to the baffle-to-cover volume. Because Freeman 013 discloses in Example 3 that the container was filled to a level 2×b of 25 mm (Freeman 013 at 10[136]), the container must be at least 25 mm high, and we obtain a minimum container volume (converting to cm) of

$$L_c \times W_c \times H_c = 44 \times 2 \times 2.5 = 220 \text{ cm}^3 .$$

The baffle-to-cover volume is

$$L_b \times W_b \times H_{bc} = 44 \times 2 \times 0.2 = 17.6 \text{ cm}^3.$$

The minimum ratio of volumes is then:

$$\frac{L_c \times W_c \times H_c}{L_b \times W_b \times H_{bc}} = (220/17.6) = 12.5.$$

It is evident by inspection that, given fixed lengths and widths of the container and baffle, and a fixed baffle-to-cover distance, the ratio of volumes is directly proportional to the height of the container. Thus, we have no difficulty dismissing Freeman's objection that the references, in particular, Spahn, teach only relations among linear dimensions of the container and the baffle. We must, of course, assume a level of ordinary

skill and insight for the ordinary worker in the art. *KSR Int'l Co. v. Teleflex, Inc.*, 550 U.S. __, __, 127 S.Ct. 1727, 1731, 82 USPQ2d 1385, 1389 (2007).

The minimum ratio of volumes calculated here, 12.5:1, is a factor of 1.6 smaller than the recited ratio of 20:1, giving for the moment no weight to the term "approximately." Under these conditions, a container having an interior height of 12.5 mm × 1.6 = 20 mm would meet the volume ratio requirements of the instant claims. Allowing the length and width of the baffle to be 90% of the length and width of the container, respectively, to permit easy insertion of the baffle into the container, the volume ratio is given by:

$$\frac{L_c \times W_c \times H_c}{(0.9)L_b \times (0.9)W_b \times H_{bc}}$$

an increase by a factor of 1/.81 ≈ 1.2. This results in a volume ratio of 15.4:1, which differs from the required factor of 20:1 by a factor of about 1.3. Under these conditions, a container having an interior height of 12.5 mm × 1.3 ≈ 16.3 mm —only about 4 mm greater than the minimum height of the container of 12.5 mm— would meet the volume ratio recited in the instant claims. As already indicated, these variations in the dimensions of the baffle and of the container arise purely from the necessity of fitting the baffle into the container and from providing some head-room over the powder charge to allow for the vaporization of the sample to allow, in the words of Freeman 013, formation of a vapor cloud "uniformly though out the space between the baffle member **50** and the container **30**." The magnitude of these variations are sufficiently minor that we must ask, as directed by the Court, "whether the improvement [here, the recited volume ratio of 20:1] is more than the predictable use of prior art elements according

to their established functions." *KSR*, 550 U.S. at __, 127 S.Ct. at 1731, 82 USPQ2d at 1389.

We observe that Freeman has not made any arguments that unexpected results or other "secondary considerations" rebut any *prima facie* case of obviousness. Moreover, we find no experimental results that differ from the results reported in Freeman 013. Thus, on the present record, there is no evidence of unexpected results. Based on the foregoing considerations, we need not analyze the teachings of Spahn, Hanson, and Shen, although we agree that Spahn, in particular, provides guidance that the size and position of the baffle relative to the evaporating material and the aperture can be varied to advantage. However, because all the teachings necessary to conclude that the claimed invention would have been *prima facie* obvious can be found in Freeman 013 itself, the Examiner's reliance on the additional cases was harmless. We therefore need not address Freeman's objections to the secondary references.

Accordingly, we AFFIRM the rejection by the Examiner of claims 1-18 as obvious over Freeman 013.

As our reasoning is considerably more detailed than the Examiner's, and involves issues not clearly discussed in the record, we denominate our disposition of this appeal a "new ground of rejection" under 37 CFR § 41.50(b), in order to afford Freeman a full and fair opportunity to respond.

In the event of further prosecution, we invite the Examiner and Freeman to consider the following possible claim interpretation and its consequences, which do not seem to have been broached in the prosecution of this application. When considering an application for patent, "the PTO

applies to the verbiage of the claims the broadest reasonable meaning of the words in their ordinary usage as they would be understood by one of ordinary skill in the art, taking into account whatever enlightenment by way of definitions or otherwise that may be afforded by the written description contained in the applicant's specification." *In re Morris*, 127 F.3d 1048, 1054, 44 USPQ2d 1023, 1027 (Fed. Cir. 1997).

A critical limitation of the subject matter of claims 1, 4-10, and 13–18 appears to be the structural requirement that "a ratio of the interior volume of the housing to a volume of the region between the baffle and the cover is at least approximately 20:1" (claims 1 and 10, emphasis added). We observe that the term "approximately" admits a degree of variation. The question is, how much? The specification indicates that "any volume ratios and baffle spacings capable of producing substantially uniform vapor flow into the region of the apertures are considered to be within the scope of the invention." (Specification at 14:30–32; emphasis added.) Hewing to the inventor's disclosure, the term "at least approximately 20:1" could be construed to encompass any volume ratio that yields a substantially uniform vapor flow from the apertures.[4] Under these circumstances, the apparatus described by Freeman 013 would appear to meet all the limitations of claim 1. We emphasize that our invitation is precisely that: an invitation and no more. The examiner and the applicants are in the better position, in the

[4] It is not apparent that Freeman's specification or the prosecution history thus far distinguishes the limitations "at least approximately 35:1" (claims 2 and 11) and "at least approximately 60:1" (claims 3 and 12) in any patentably distinct way from the limitation "at least approximately 20:1" of claims 1 and 10.

first instance, to evaluate the import of the disclosure and the scope of the various claims, and we leave that evaluation to their sound discretion.

D. Conclusion

ORDERED that upon consideration of the record and for the reasons given, the Examiner's rejection of claims 1–18 under 35 U.S.C. § 103(a) over the combined teachings of Freeman 013, Spahn, Hanson, and Shen is AFFIRMED.

FURTHER ORDERED that since our rationale differs from the rationale of the examiner, our affirmance is designated as a new rejection. 37 CFR § 41.50(b) (2006).

FURTHER ORDERED that our decision is not a final agency action.

FURTHER ORDERED that within **two (2) months** from the date of our decision appellant may further prosecute the application on appeal by exercising one of the two following options:

1. Request that prosecution be reopened by submitting an amendment or evidence or both. 37 CFR § 41.50(b)(1) (2006).

2. Request rehearing on the record presently before the Board. 37 CFR § 41.50(b)(2) (2006).

FURTHER ORDERED that the time for taking action under either 37 CFR §§ 41.50(b)(1) or 41.50(b)(2) is not extendable under the provisions of 37 CFR § 1.136(a) (2006).

AFFIRMED

(37 CFR § 41.50(b) (2006))

EASTMAN KODAK COMPANY
Patent Legal Staff
343 State Street
Rochester, N.Y. 14650-2201