The opinion in support of the decision being entered today was *not* written for publication and is *not* binding precedent of the Board.

UNITED STATES PATENT AND TRADEMARK OFFICE

BEFORE THE BOARD OF PATENT APPEALS
AND INTERFERENCES

Ex parte LARISA ALEXANDRA ELMAN, ROBERT ALLAN AHTI,
and CHRISTIAN DUPUIS

Appeal 2007-1204
Application 10/370,869
Technology Center 3700

Decided: May 18, 2007

Before TERRY J. OWENS, LINDA E. HORNER, and JOSEPH A. FISCHETTI, *Administrative Patent Judges*.

FISCHETTI, *Administrative Patent Judge*.

DECISION ON APPEAL

STATEMENT OF THE CASE

Appellants, Larisa Alexandra Elman et al., seek our review under 35 U.S.C. § 134 of the Examiner's final rejection of claims 1-32, and 45-57. Claims 33-44 stand withdrawn. We have jurisdiction under 35 U.S.C. § 6(b) (2002).

SUMMARY OF DECISION

We AFFIRM.

THE INVENTION

Appellants claim to have invented a tool holding apparatus which is said to be comprised of a base for attachment to a table and an insert having a workpiece support surface each referenced to the other such that a workpiece placed onto the insert can be referenced to the table.

Claim 1, reproduced below, is representative of the subject matter on appeal.

> 1. A modular tooling apparatus for performing a metalworking operation on a workpiece comprising:
>
> a) a base configured for semi-permanent attachment to a table of a metalworking machine, the base comprising an attachment surface, the attachment surface comprising a locating feature, and
>
> b) an insert associated with and separably secured to the attachment surface, the insert comprising a locating feature, and a workpiece support feature on a surface thereof;
>
> wherein the locating feature on the insert is configured to associate with the locating feature of the attachment surface, to define a location of the workpiece support feature relative to the base.

The Examiner relies upon the following as evidence of unpatentability:

Engibarov	US 5,056,766	Oct. 15, 1991
Wharton	US 2,676,413	Apr. 27 , 1954

THE REJECTION

Appellants seek our review of the Examiner's rejection of claims 1-32 and 45-57 under 35 U.S.C. § 103(a) over Engibarov in view of Wharton.

ISSUE

Appellants contend the Examiner erred in rejecting claims 1-32 and 45-57 using Engibarov and Wharton as applied under 35 U.S.C. § 103(a) because there is no motivation to combine their teachings (Br. 14). The Appellants further contend that even when combined, the prior art fails to teach or suggest all of the claimed elements (Br. 16). The Examiner, however, held it would have been obvious to one with ordinary skill in the art to combine the tooling apparatuses of Engibarov and Wharton to result in the claimed combination.

The issue before us is whether Appellants have shown that the Examiner has erred in combining the teachings of Engibarov and Wharton such that it would have led one having ordinary skill in the art at the time of the invention to make the claimed combination.

FINDINGS OF FACT

We find the following facts by a preponderance of the evidence:

Engibarov discloses a tooling apparatus for performing a metalworking operation on a workpiece (Engibarov, col. 1, ll. 5-7).

Engibarov discloses a base 10 comprising an attachment surface 10a, the attachment surface further comprising a locating feature in the form of a T-slot 12 (Engibarov, col. 5, ll. 46-50).

Engibarov discloses an insert 16 having a workpiece support feature in the form of a jaw 18 which is carried by the insert 16 through the intermediary of jaw legs 34, 36 (Engibarov, col. 4, ll. 10-15 and 48-50).

Engibarov discloses jaw 18 of insert 16 having a locating feature comprised of insert depending portions 39, 43 and a clamp member 62 each configured to associate with the T-shaped slot in the base 10 such that when bolts 70, 72 are used to tighten clamp member 62 to base 10, the attachment surface of the insert 16 is clamped to the attachment surface 10a of the base 10 (Engibarov, col. 4, ll. 60-64, col. 5, ll. 45-53).

Wharton discloses a tool holder which holds and locates a workpiece to be operated on (Wharton, col. 1 ll. 42-45).

Wharton discloses a base 2 and sub-base 1 configured for semi-permanent attachment to a table of a metalworking machine by clamping (Wharton, col. 3 ll. 41-45).

Wharton discloses a tool holder comprised of the sub-base 1 having T-slots 4, 5

serving as a locating feature for an insert 7 which uses the T-slot to clamp the insert in place on the base 1 using T-shaped bolts 53 (Wharton, col. 5, ll. 66-75, col. 6, ll. 1-4).

PRINCIPLES OF LAW

During prosecution the PTO gives claims their "broadest reasonable interpretation consistent with the specification." *In re Hyatt*, 211 F.3d 1367, 1372, 54 USPQ2d 1664, 1667 (Fed. Cir. 2000).

To determine whether a prima facie case of obviousness has been established, we are guided by the factors set forth in *Graham v. John Deere Co.*, 383 U.S. 1, 17, 148 USPQ 459, 467 (1966), *viz.*, (1) the scope and content of the prior art; (2) the differences between the prior art and the claims at issue; and (3) the level of ordinary skill in the art. "[T]he principles laid down in *Graham* reaffirmed the "functional approach" of *Hotchkiss*, 11 How. 248, 13 L.Ed. 683." *KSR Int'l Co. v. Teleflex Inc.*, 127 S. Ct. 1727, 1739, 82 USPQ2d 1385, 1395 (2007).

In addition to the findings under *Graham*, there must also be "some articulated reasoning with some rational underpinning to support the legal conclusion of obviousness". *See In re Kahn*, 441 F.3d 977, 988, 78 USPQ2d 1329, 1336 (Fed. Cir. 2006) (*cited with approval in KSR*, 127 S. Ct. at 1741, 82 USPQ2d at 1396).

The application of common sense may control the combining of references.

> Common sense teaches, however, that familiar items may have obvious uses beyond their primary purposes, and in

> many cases a person of ordinary skill will be able to fit the teachings of multiple patents together like pieces of a puzzle.

KSR, 127 S. Ct. at 1742, 82 USPQ2d at 1397 (finding that during an obviousness determination, the person of ordinary skill's attempt to solve a problem is not limited to only those elements of the prior art designed to solve the same problem).

> [T]he problem motivating the patentee may be only one of many addressed by the patent's subject matter. The question is not whether the combination was obvious to the patentee but whether the combination was obvious to a person with ordinary skill in the art. Under the correct analysis, any need or problem known in the field of endeavor at the time of invention and addressed by the patent can provide a reason for combining the elements in the manner claimed.

KSR, 127 S. Ct. 1727 at 1742, 82 USPQ2d at 139.

> The analogous-art test requires that the Board show that a reference is either in the field of the applicant's endeavor or is reasonably pertinent to the problem with which the inventor was concerned in order to rely on that reference as a basis for rejection. *In re Oetiker*, 977 F.2d 1443, 1447 (Fed. Cir. 1992). References are selected as being reasonably pertinent to the problem based on the judgment of a person having ordinary skill in the art. *Id.* ("[I]t is necessary to consider 'the reality of the circumstances,'-in other words, common sense-in deciding in which fields a person of ordinary skill would reasonably be expected to look for a solution to the problem facing the inventor." *Id.* (*quoting In re Wood*, 599 F.2d 1032, 1036 (C.C.P.A.1979))).

Kahn, 441 F.3d at 986-87, 78 USPQ2d at 1335-1336.

ANALYSIS

The rejections are affirmed as to claims 1-32 and 45-57.

The Combination of Engibarov and Wharton

All claims 1-32 and 45-57 stand rejected under 35 U.S.C. § 103(a) as being unpatentable over Engibarov in view of Wharton. Appellants assert "the Examiner has impermissibly used Appellants' teachings as a guide in order to select elements from two references unrelated both to each other and to Appellants' invention in attempting to arrive at Appellants' invention" (Br. 13). We reject the notion that the references, Engibarov and Wharton, are unrelated both to each other and to the Appellants' device because, as found *supra*, both prior art devices disclose a tooling apparatus for holding a workpiece to perform a work operation on it. Engibarov is properly relied on as a base reference because it discloses a base 10 having T-slots 12 serving as a locating feature for an insert clamped to the base 10 to define "a location" when tensioned by clamping bolts 70, 72 threaded to a clamping member 60. The one feature lacking in Engibarov is a base configured for semi-permanent attachment to a table of a metalworking machine. Wharton, however, discloses this feature at base member 2 with sub-base 1. Like the base in Engibarov, the sub-base 1 in Wharton also has T-slots 4, 5 serving as a locating feature for an insert 7. This insert also uses the T-slot to clamp it in place on the base using T-shaped bolts 53. Thus, in each of Engibarov and Wharton, like mechanisms are used to fix the respective inserts in place on each device. The

asserted hindsight and nonanalogous art arguments are thus negated by the common securing feature. Moreover, because both references utilize similar T-slot positioning structures, the proposed modification to the base 10 in Engibarov would not detract from its intrinsic structure.

The Examiner has provided reasons to combine the teachings of the prior art.[1] In response, the Appellants maintain "[i]t is a fundamental premise in patent prosecution practice that, in making an assertion of obviousness of Appellants' invention in view of a combination of references, there must exist *in the references cited* by the Examiner a suggestion or incentive (motivation) supporting the combination of references …." (Br.14, 15). This was not a correct statement of the law at the time the brief was filed (*see In re Kahn*, 441 F.3d 977, 987-88, 78 USPQ2d 1329, 1336, 1337 (Fed. Cir. 2006) (finding that the teaching, motivation, or suggestion may be implicit from the prior art as a whole, and such implicit motivation may come from the knowledge of one of ordinary skill in the art or the nature of the problem to be solved), and it is no longer the law in view of the Supreme Court's recent holding in *KSR Int'l Co. v. Teleflex Inc*., 127 S. Ct. 1727, 82 USPQ2d 1385 (2007). In *KSR*, the Court characterized the teaching, suggestion, motivation test as a "helpful insight" but found that when it is rigidly applied, it is incompatible with the Court's precedents. *KSR*, 127 S. Ct. at 1741, 82

[1] One reason provided by the Examiner is, "to have a portable clamp that is attachable to any number of work surfaces for semi permanent use of a clamping base" (Answer 4). In his Supplemental Answer (second paragraph) to Appellants' Supplemental Reply (Nov. 29, 2005, 2), the Examiner states that combining the teachings would have been "clear because you have multiple workholders you are going to modify each of them to make improvements to the current workholders."

USPQ2d at 1396. The holding in *KSR* makes clear that it is no longer absolutely necessary to find motivation in the references themselves.

> Helpful insights, however, need not become rigid and mandatory formulas; and when it is so applied, the TSM test is incompatible with our precedents. The obviousness analysis cannot be confined by a formalistic conception of the words teaching, suggestion, and motivation, or by overemphasis on the importance of published articles and the explicit content of issued patents.
>
> *KSR*, 127 S. Ct. at 1741, 82 USPQ2d at 1396. Rather, the application of common sense may control the reasoning to combine prior art teachings.

See KSR, 127 S. Ct. at 1742, 82 USPQ2d at 1397.

The practice of overlaying one surface on top of another to protect or give the underlying surface other uses is familiar, such as found in the simplest applications. It is common sense, for example, to removably place a cutting board over a kitchen table during food preparation to protect the table and to thereby allow the underlying table to serve other purposes once the cutting board is removed. Similarly, to allow the support surface 10a in Engibarov to serve other functions, such as for writing, common sense would lead one having ordinary skill in the art to modify it as a separate member removably mounted to a flat table support surface, as taught by Wharton.

We conclude the teachings of Engibarov and Wharton would have led one having ordinary skill in the art to the combination of claims 1-32, and 45-57.

Claim Element Analysis

Appellants argue, even if combined, the teachings of Engibarov and Wharton do not answer each and every limitation of independent claims 1, 24, 47, 51, and 56 (Br. 11). Appellants' sole remaining argument regarding the patentability of independent claims 1, 24, 47, 51, and 56 is a distinctive definition of the term "location" (Br. 11). Appellants maintain the term "location" as used in these independent claims should be defined by the Specification in paragraph [0043] as "a precise position (in x, y, and z space) and orientation (relative to x, y, and z axes) relative to the base and to the metalworking operation, respectively." *Id.* We accept this definition for the term "location" as defined in paragraph [0043] of the Specification, but we cannot give it the weight the Appellants seek.

Appellants argue the term "location" means a point in space which can "repetitively position" (Br. 11) workpieces for precision machining operations, or in other words, allow a workpiece to be "precisely repositionable" (Br. 11). This argument fails because it assumes Appellants have defined "location" as a fixed point in space, and thus differentiated from the infinite other existing points. Paragraph [0043] of the Specification, however, describes the term "location" only as being *precisely* defined both in x, y, and z space and in orientation to x, y, and z axes, but not as a fixed, given point in space.

Webster's Collegiate Dictionary Tenth Edition (1996) defines "precise" *inter alia*, as *1: exactly or sharply defined 2. minutely exact.* All points in space have a position precisely definable in x, y, and z coordinates and have a precisely definable orientation relative to x, y, and z axes, including those definable relative

to the base 10 in Engibarov. Such precise orientation at a given point in time, does not necessarily imply that the "precise" point at that time is reproducible or "fixed" at a later time. Appellants' reliance on the term "precise" in the Specification to support a narrow meaning of a given fixed position is rejected, because "precise" only supports the degree of accuracy for values defining "a location," but does not mandate a fixed reference location.

In Engibarov then, the user of the tooling apparatus can define "a location" of the workpiece support feature along any point along the T-shaped slot 12 when the user clamps the insert 16 to the base 10. This is because the depending corners 39, 43 of the insert 16 in Engibarov act as part of the locating feature to locate the insert 16 at a precise location along the x, y and z axes. As illustrated below, once the bolts 70, 72 of the insert 16 are tightened to cause the clamp member 60 to abut against the shoulder of the T-shape slot 12, the insert lower attachment surface (ISA) becomes fixed to the base attachment surface 10a by this clamping action. At this point, the location of the insert 16 is precisely defined by the "location", X_0, Y_0, Z_c, where *c* is the point along the Z axis at which the insert 16 is clamped to the base 10 and has a given value of the distance measured from the intersection of the indicated X and Y axes.

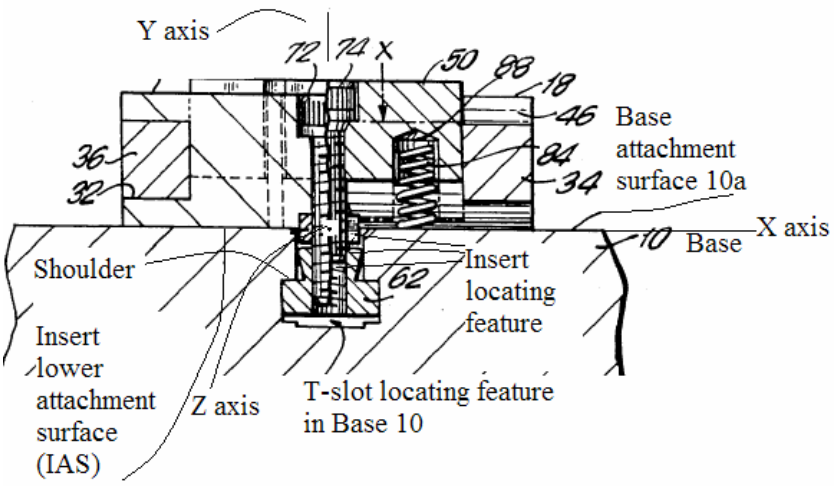

Fig. 3 of Engibarov annotated to show the x,y,z location of the insert.

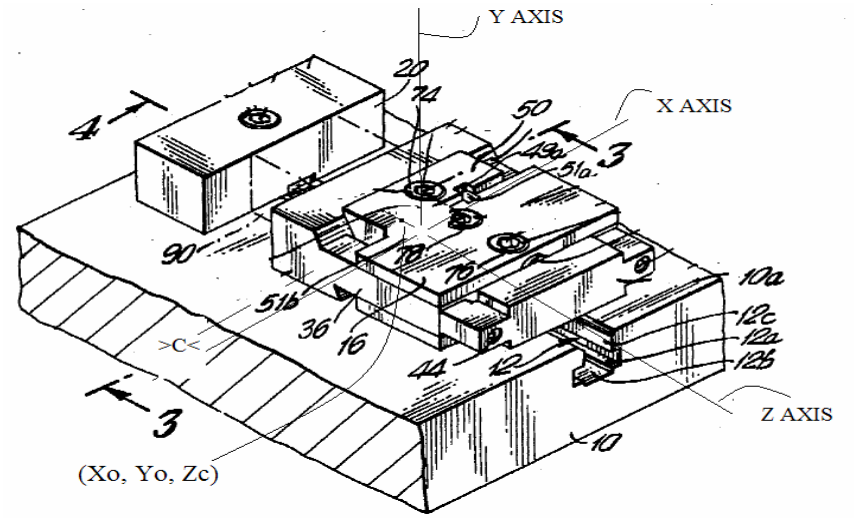

Fig.2 of Engibarov annotated to show the x,y,z location of the insert.

Because the insert in Engibarov also carries the workpiece support surface/feature at element 18, the workpiece support feature is thus also referenced to location

(X_0, Y_0, Z_c) by the clamped insert 16.

Appellants did not provide a substantive argument as to the separate patentability of dependent claims 2-23, 45, 48-50, 52, 53, 55, and 57. Therefore, these claims fall with claims 1, 24, 47, 51 and 56. *See* 37 C.F.R. § 41.37(c)(1)(vii) (2006).

Appellants attempt to separately argue additional claim elements particular to claims 24 and 51, but in so doing, merely point out what these claims recite. A statement which merely points out what a claim recites will not be considered an argument for separate patentability of the claim. *See* 37 C.F.R. § 41.37(c)(1)(vii) (2006). Additionally, Appellants further do not provide a substantive argument as to the separate patentability of dependent claims 25-32, 46, 52, and 55. Therefore, claims 25-32 and 46; and 52 and 55 fall with claims 24 and 51, respectively. *See* 37 C.F.R. § 41.37(c)(1)(vii) (2006).

CONCLUSIONS OF LAW

Appellants have not shown that the Examiner erred in rejecting claims 1-32 and 45-57 under 35 U.S.C. § 103(a) as unpatentable over Engibarov in view of Wharton.

DECISION

The decision of the Examiner to reject claims 1-32 and 45-57 is AFFIRMED.

No time period for taking any subsequent action in connection with this appeal may be extended under 37 C.F.R. § 1.136(a). *See* 37 C.F.R. § 1.136(a)(1)(iv) (2006).

AFFIRMED

hh

HASSE & NESBITT, LLC
8837 CHAPEL SQUARE DRIVE
SUITE C
CINCINNATI, OH 45249