The opinion in support of the decision being entered today
is *not* binding precedent of the Board.

UNITED STATES PATENT AND TRADEMARK OFFICE

**BEFORE THE BOARD OF PATENT APPEALS
AND INTERFERENCES**

Ex parte JEFFREY L. CABLE, WILLIAM J. KURNOCIK,
DANIEL R. FINK, and RICHARD J. ORR

Appeal 2007-1214
Application 10/272,270
Technology Center 3600

Decided: July 16, 2007

Before DONALD E. ADAMS, ERIC GRIMES, and RICHARD M. LEBOVITZ, *Administrative Patent Judges*.

GRIMES, *Administrative Patent Judge*.

DECISION ON APPEAL

This is an appeal under 35 U.S.C. § 134 involving claims to a vibratory conveyor. The Examiner has rejected the claims as obvious. We have jurisdiction under 35 U.S.C. § 6(b). We affirm.

BACKGROUND

"Vibratory feeders and conveyors are widely used . . . for such purposes as the metering of bulk material, such as ore, stone, [or] grain, . . . from storage bins to other processing equipment" (Specification 1). They

"generally consist of a trough member connected to one or more base members by means of spring mechanisms such as wound steel wire coil springs or stacked arrays of elastomer rubber blocks" (*id.*).

According to the Specification, both coil springs and elastomer springs have disadvantages. Coil springs tend to sag or bend when applied in the non-vertical orientation used in vibratory feeders, unless an additional leaf spring is added (*id.* at 3). Disadvantages of elastomer springs include difficulties in achieving consistent spring rates, relatively high cost of manufacture, and aging of the blocks resulting in loss of spring rate (*id.* at 6).

Figure 1a[1] of the instant application is reproduced below:

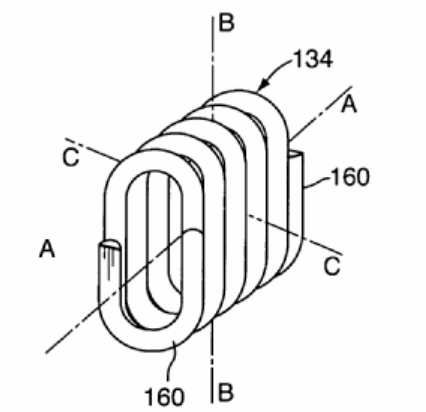

The figure is said to show "an ovoid-shaped coil spring . . . with the longitudinal [line A-A], lateral [line B-B] and transverse [line C-C] axis indicated by dashed lines" (Specification 8; see also *id.* at 10:11-17)

The Specification discloses that an ovoid-shaped coil spring "compares favorably to the elastomer spring, having the same advantages of a high spring rate, and being stiff enough in the shear direction to support the

[1] Formal drawings, filed March 24, 2003.

exciter without the need for additional support springs" (*id.* at 14). The ovoid coil spring also "has a consistent, repeatable spring rate, [and] an effectively infinite shelf life" and can be manufactured to close tolerances more easily than elastomer springs (*id.*). The Specification discloses that "[a]lthough ovoid-shaped springs are somewhat easier to manufacture, springs closer to true rectangles can also be used" in vibratory feeders (*id.* at 10).

DISCUSSION

1. CLAIMS

Claims 1-13 are on appeal. Claim 14 is also pending but has been withdrawn from consideration by the Examiner.

Claim 1 is representative and reads as follows:

> 1. A vibratory conveying apparatus, comprising:
> a trough having a conveying surface;
> a vibratory exciter;
> a first coil spring arranged to be compressed between a first portion of the trough and a first portion of the exciter, said first coil spring having a longitudinal axis around which said first coil spring is wound, a transverse axis and a lateral axis, said transverse axis and said lateral axis being perpendicular and in a plane perpendicular to the longitudinal axis;
> wherein an outside dimension of said first coil spring is greater along the lateral axis than along the transverse axis; and
> wherein the lateral axis of the first coil spring is generally parallel to a vertical plane containing the longitudinal axis.

Thus, claim 1 is directed to a vibratory conveyor that has a trough, a vibratory exciter, and a coil spring compressed between the trough and exciter. As we interpret the claim language, the dimensions specified for the

coil spring require it to have an ovoid- or rectangular-shaped coil surrounding the longitudinal axis, and the lateral axis of the spring is oriented vertically.

2. PRIOR ART

The Examiner relies on admitted prior art depicted in Figures 3 and 4 of the application, and on the following reference:

Buckley	US 274,715	Mar. 27, 1883

3. OBVIOUSNESS -- CLAIMS 1-3, 10, AND 11

Claims 1-3, 10, and 11 stand rejected under 35 U.S.C. § 103 as obvious over the vibratory conveying apparatus depicted in Figure 3, admitted by Appellants as being prior art (Specification 1: 22-23), in view of Buckley (Answer 3).

The Examiner states that Figure 3 discloses all the limitations of claim 1, "except for the use of ovoid springs" (Final Rejection 2 (February 12, 2006)). To meet this deficiency, the Examiner notes that "Buckley teaches the interchangeability of ovoid springs and coil springs" (*id.*). The Examiner concludes that one of ordinary skill would have considered it obvious "to use ovoid springs as such are well known and the choice of a particular spring type is merely a design choice based on environment, cost, assembly requirements, and availability as well as desired spring characteristics like spring rate, durability and weight" (*id.*).

Appellants argue that, "contrary to the Examiner's assertion, Buckley does not teach that ovoid coil springs and circular coil springs are interchangeable. At most, Buckley teaches that ovoid coil springs and circular coil springs were both in existence prior to the filing date of the

instant application" (Br. 6). Appellants argue that "Buckley does not teach . . . that a device can be improved by replacing its circular coil springs with ovoid coil springs," (*id.* at 7) and conclude that "[t]herefore, the person of ordinary skill in the art would not be inclined to use the ovoid coil springs of Buckley in the conveyor of Figure 3" (*id.* at 7).

We do not find Appellants' arguments persuasive.

The United States Supreme Court recently held that "[t]he obviousness analysis cannot be confined by a formalistic conception of the words teaching, suggestion, and motivation, or by overemphasis on the importance of published articles and the explicit content of issued patents." *KSR Int'l v. Teleflex Inc.*, 127 S.Ct. 1727, 1741, 82 USPQ2d 1385, 1396 (2007). The Court noted that it had previously held "that when a patent 'simply arranges old elements with each performing the same function it had been known to perform' and yields no more than one would expect from such an arrangement, the combination is obvious." *Id.* at 1740, 82 USPQ2d at 1395-96 (quoting *Sakraida v. AG Pro, Inc.*, 425 U.S. 273, 282, 189 USPQ 449, 543 (1976)). The Court reasoned that a "patent for a combination which only unites old elements with no change in their respective functions . . . obviously withdraws what is already known into the field of its monopoly and diminishes the resources available to skillful men." *Id.* at 1739, 82 USPQ2d at 1395 (quoting *Great Atlantic & Pacific Tea Co. v. Supermarket Equip. Corp.*, 340 U.S. 147, 152, 87 USPQ 303, 306 (1950)).

In the instant case, the prior art discloses an apparatus that differs from that of claim 1 only in that it uses a circular, rather than ovoid, coil spring. Buckley discloses coil springs in various shapes, including ovoid

(Buckley, p. 1, ll. 72-74; Figures 5, 11, 13, and 14). Thus, ovoid springs were well-known in the art at the time the present application was filed. (See also the instant Specification at 10: 18-20 (rectangular springs commercially available as of this application's filing date).)

Thus, claim 1 recites an arrangement of old elements with each element performing its known prior art function. Moreover, one of ordinary skill would have expected that ovoid shaped coil springs would carry out the same function as the coil springs in the prior art apparatus shown in Appellants' Figure 3; i.e., both round and ovoid coil springs would be expected to function as springs.

It is true, as Appellants argue, that "Buckley does not teach . . . that a device can be *improved* by replacing its circular coil springs with ovoid coil springs," (Br. 7, emphasis added). However, a substitution need not result in an expected improvement in order to be obvious under § 103. *See KSR*, 117 S.Ct at 1740, 82 USPQ2d at 1396 ("[W]hen the question is whether a patent claiming the combination of elements of prior art is obvious, . . . a court must ask whether the improvement is more than the predictable use of prior art elements according to their established functions."). Here, we agree with the Examiner that those skilled in the art would have expected the prior art device shown in the Specification's Figure 3 to function with either round or ovoid coil springs. We therefore agree with the Examiner that one of ordinary skill would have considered it obvious to substitute Buckley's ovoid shaped coil spring for the coil springs in the prior art apparatus depicted in Appellants' Figure 3.

Appellants argue that "ovoid coil springs have existed for a long time, perhaps even longer than the type of conveying apparatus depicted in Figure 3" (Reply Br. 3). Nevertheless, Appellants argue, the prior art did not switch from circular springs to ovoid springs (*id.*) and therefore one "can only conclude that the person of ordinary skill in the art, faced with the problem of circular coil springs failing to provide sufficient lateral support for the components of the conveying apparatus, would not have found it obvious to substitute ovoid coil springs for the circular coil springs" (*id.* at 4).

We are not persuaded by this argument. "[T]he law does not require that the references be combined for the reasons contemplated by the inventor." *In re Beattie*, 974 F.2d 1309, 1312, 24 USPQ2d 1040, 1042 (Fed. Cir. 1992); *see also KSR*, 127 S. Ct. at 1741, 82 USPQ2d at 1397 ("In determining whether the subject matter of a patent claim is obvious, neither the particular motivation nor the avowed purpose of the patentee controls. What matters is the objective reach of the claim. If the claim extends to what is obvious, it is invalid under § 103.").

Thus, the fact that Appellants' purpose in using ovoid coil springs was to avoid shortcomings in prior art springs does not render claim 1 any less obvious, because one of ordinary skill viewing the prior art would have already recognized that ovoid coil springs would be just as useful in the prior art device depicted in Figure 3 as circular coil springs.

We therefore affirm the obviousness rejection of claim 1 over Figure 3 and Buckley. Claims 2, 10, and 11 were not argued separately and therefore fall with claim 1. 37 C.F.R. § 41.37(c)(1)(vii).

Appellants argue that claim 3 is separately patentable because, "while Buckley discloses circular, oval and triangular coil springs, he does not disclose rectangular coil springs" (Br. 7). The Examiner asserts that claim 3 encompasses ovoid springs "to the broad degree claimed" (Answer 5).

We note that "obviousness requires a suggestion of all limitations in a claim," *CFMT, Inc. v. Yieldup Intern. Corp.*, 349 F.3d 1333, 1342, 68 USPQ2d 1940, 1947 (Fed. Cir. 2003). Claim 3 recites that the spring has "a cross section, taken in said plane, that is rectangular."

It is well settled that "claims in an application are to be given their broadest reasonable interpretation consistent with the specification and that claim language should be read in light of the specification as it would be interpreted by one of ordinary skill in the art." *In re Sneed*, 710 F.2d 1544, 1548, 218 USPQ 385, 388 (Fed. Cir. 1983) (citation omitted).

As noted by the Examiner (Answer 4), the Drawings do not depict a rectangular spring. The only portion of the Specification explaining the language in claim 3 states:

> Although ovoid-shaped springs are somewhat easier to manufacture, springs closer to true rectangles can also be used, as sold by DRACO Spring Mfg. Co. . . . *The details of this spring and the manufacturing process thereof have been disclosed in a separate patent application now pending, U.S. Serial No. 10/124,497, filed July 3, 2002, herein incorporated by reference*.

(Specification 10, emphasis added.)

The '497 application (actually filed on April 17, 2002) discloses "[a] coil spring having a substantially circular arc on two sides and a flattened opposite side" ('497 application, abstract). Figure 3 of the '497 application is reproduced below:

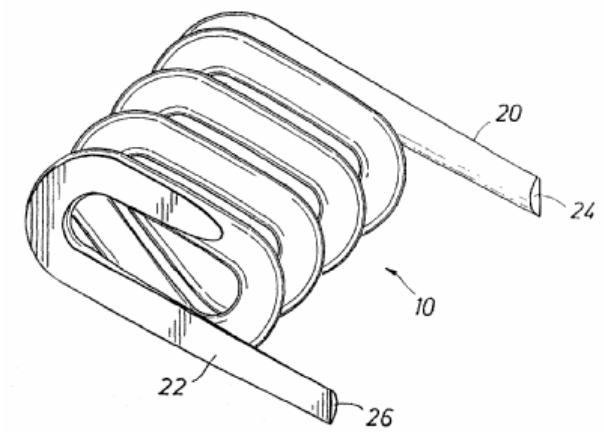

The figure shows the spring described in the '497 application (*id.* at 4, ¶ [0012]). Thus, giving claim 3 its broadest reasonable interpretation consistent with the Specification, we interpret its claim language to encompass the coil springs described and depicted in the '497 application.

Figures 13 and 14 of Buckley depict coil springs having flattened (i.e. straight) sides, and an overall coil configuration along the longitudinal axis substantially similar to the straight sided coil springs in Figure 3 of the '497 application. We therefore agree with the Examiner that claim 3 reads on Buckley's springs.

We affirm the Examiner's rejection of claim 3 as being obvious over the prior art depicted in Appellants' Figure 3 in view of Buckley.

4. OBVIOUSNESS -- CLAIMS 1-13

Claims 1-13 stand rejected under 35 U.S.C. § 103 as obvious over the vibratory conveying apparatus depicted in Figure 4 of the Specification, admitted by Appellants as being prior art, in view of Buckley (Answer 3).

The Examiner finds that Figure 4 discloses all the limitations of claim 1, "except for the use of ovoid springs" (Final Rejection 2 (February 12, 2006)). To meet this deficiency, the Examiner notes that "Buckley teaches

ovoid springs" (*id.*). The Examiner concludes that one of ordinary skill would have considered it obvious "to use ovoid springs as such are well known and the choice of a particular spring type is merely a design choice based on environment, cost, assembly requirements, and availability as well as desired spring characteristics like spring rate, durability and weight" (*id.* at 2-3).

Appellants argue that "no motivation exists to substitute Buckley's ovoid coil spring for the elastomeric springs in the conveying apparatus of Figure 4. In particular, the Examiner has not identified any prior art reference which would suggest that ovoid coil springs and elastomeric springs are interchangeable" (Br. 8). Rather, Appellants argue, "the Examiner has improperly relied on hindsight to conclude that the substitution of ovoid coil springs for the elastomeric springs in the conveying apparatus of Figure 4 would be obvious" (*id.; see also* Reply Br. 4-5).

We do not find Appellants' arguments persuasive. When evaluating claims for obviousness "[a] factfinder should be aware, of course, of the distortion caused by hindsight bias and must be cautious of arguments reliant upon *ex post* reasoning. Rigid preventative rules that deny factfinders recourse to common sense, however, are neither necessary under our case law nor consistent with it." *KSR*, 127 S.Ct. at 1742, 82 USPQ2d at 1397 (citations omitted). Moreover, as is often stated, any obviousness analysis by necessity involves using hindsight, "but so long as it takes into account only knowledge which was within the level of ordinary skill at the time the claimed invention was made and does not include knowledge gleaned only

from applicant's disclosure, such a reconstruction is proper." *In re McLaughlin*, 443 F.2d 1392, 1395, 170 USPQ 209, 212 (CCPA 1971).

We agree with the Examiner that one of ordinary skill would have expected that ovoid coil springs would carry out the same function as elastomeric springs in the prior art apparatus shown in Appellants' Figure 4. Specifically, Buckley discloses coil springs in various shapes, including ovoid (Buckley, p. 1, ll. 72-74; Figures 5, 11, 13, and 14). Thus, ovoid springs were well-known in the art at the time the present application was filed.

Appellants argue that one of ordinary skill would not have reverted to coil springs from elastomeric springs, because "[c]oil springs have other problems which discourage their selection, such as reduced operating limits caused by the stresses which are imparted to the springs during manufacture" (Reply Br. 5).

We are not persuaded by this argument. As discussed above, one of ordinary skill would have reasoned that ovoid coil springs would have been useful in the apparatus depicted in Figure 4. Moreover, it is well settled that obviousness analyses involving potential modifications of the prior art entail weighing the relative trade-offs of the various alternatives. *See Medichem S.A. v. Rolabo S.L.,* 437 F.3d 1157, 1165, 77 USPQ2d 1865, 1870 (Fed. Cir. 2006) ("The fact that the motivating benefit comes at the expense of another benefit, however, should not nullify its use as a basis to modify the disclosure of one reference with the teachings of another. Instead, the benefits, both lost and gained, should be weighed against one another.")

(quoting *Winner Int'l Royalty Corp. v. Wang*, 202 F.3d 1340, 1349 n.8, 53 USPQ2d 1580, 1587 n.8 (Fed. Cir. 2000)).

In the instant case, circular coil springs were known in the prior art to have the disadvantage of lower spring rates along their longitudinal and lateral axes, requiring additional leaf springs when used in vibratory conveyors (Specification 4), whereas, as Appellants admit, "they are relatively inexpensive and have an infinite shelf life" (Brief 8). Elastomeric springs were known in the art to be advantageous because of their higher lateral spring rates (Specification 5), but suffered from difficulties with respect to consistent manufacture and durability (*id.* at 6-7).

Thus, each of the alternatives of record had known advantages and disadvantages. However, the record does not provide any direct teaching away from the use of ovoid coil springs in vibratory conveying apparatuses. Therefore, based on the prior art of record, we agree with the Examiner that one of ordinary skill would have considered both coil and elastomeric springs to be useful in the device depicted in Appellants' Figure 4.

Appellants argue that, when applied to vibratory conveyors, ovoid coil springs avoid the use of leaf springs required with circular coil springs, as well as avoiding the manufacturing and aging problems associated with elastomeric springs (Br. 8-9). Appellants argue that "[t]he present invention was therefore developed to satisfy the problems experienced with both circular coil springs and elastomeric springs," and that the use of ovoid coil springs "is more than a matter of mere design choice" (*id.* at 9).

We do not find this argument persuasive. As stated above, "[i]n determining whether the subject matter of a patent claim is obvious, neither

the particular motivation nor the avowed purpose of the patentee controls. What matters is the objective reach of the claim. If the claim extends to what is obvious, it is invalid under § 103." *KSR*, 127 S.Ct. at 1741, 82 USPQ2d at 1397.

Claim 1 differs from the prior art only in the substitution of one known compressible spring for another. Therefore, the fact that Appellants' purpose in using ovoid coil springs was to avoid shortcomings in prior art springs does not render claim 1 any less obvious, because the prior art suggested that ovoid springs would be useful as the spring element in the prior art device depicted in Figure 4.

As discussed *supra*, "when a patent 'simply arranges old elements with each performing the same function it had been known to perform' and yields no more than one would expect from such an arrangement, the combination is obvious." *KSR*, 127 S. Ct. at 1740, 82 USPQ2d at 1395-96. Rather, a conclusion of nonobviousness is supported if the prior art elements "work[] together in an unexpected and fruitful manner." *Id.* at 1740, 82 USPQ2d at 1395.

Here, although Appellants assert that ovoid coil springs eliminate the need for the additional leaf springs required with circular coil springs (Br. 9), they do not point to evidence demonstrating that this is an unexpected advantage over the prior art. "[I]t is well settled that unexpected results must be established by factual evidence." *In re Geisler*, 116 F.3d 1465, 1470, 43 USPQ2d 1362, 1365 (Fed. Cir. 1997). Thus, in the absence of objective evidence, the asserted advantages of ovoid coil springs over the prior art do not demonstrate that claim 1 is unobvious.

To summarize, because claim 1 differs from the prior art only in the substitution of one functionally equivalent spring for another, we agree with the Examiner that one of ordinary skill would have considered claim 1 obvious in view of Buckley and the apparatus depicted in Figure 4. We therefore affirm the Examiner's rejection of claim 1 over that prior art. Because they were not argued separately, claims 2 and 4-13 fall with claim 1. 37 C.F.R. § 41.37(c)(1)(vii).

With respect to claim 3, Appellants argue that the combination of Figure 4 and Buckley "does not result in a conveying apparatus which comprises rectangular coil springs. This is due to the fact that, while Buckley discloses circular, oval and triangular coil springs, he does not disclose rectangular coil springs" (*id.* at 11).

We do not find this argument persuasive. As discussed above, when claim 3 is given its broadest reasonable interpretation consistent with the relevant portions of the Specification, it encompasses the springs disclosed by Buckley. As also discussed above, one of ordinary skill would have considered Buckley's springs to be useful in the device depicted in Figure 4. We therefore agree with the Examiner that one of ordinary skill would have considered it obvious to use springs encompassed by claim 3 in the device of Figure 4. Thus, we affirm the Examiner's obviousness rejection of claim 3.

SUMMARY

We affirm the Examiner's obviousness rejection of claims 1-3, 10, and 11 over the prior art depicted in Figure 3 in view of Buckley.

We affirm the Examiner's obviousness rejection of claims 1-13 over the prior art depicted in Figure 4 in view of Buckley.

No time period for taking any subsequent action in connection with this appeal may be extended under 37 C.F.R. § 1.136(a).

AFFIRMED

dm

Henry C. Query Jr.
504 S. Pierce Avenue
Wheat`on IL 60187