UNITED STATES PATENT AND TRADEMARK OFFICE

BEFORE THE BOARD OF PATENT APPEALS
AND INTERFERENCES

Ex parte ORDE LEVINSON

Appeal 2007-1346
Application 10/239,901
Technology Center 3700

Decided: February 14, 2008

Before MURRIEL E. CRAWFORD, JENNIFER D. BAHR, and DAVID B. WALKER, *Administrative Patent Judges*.

BAHR, *Administrative Patent Judge*.

DECISION ON APPEAL

STATEMENT OF THE CASE

Orde Levinson (Appellant) appeals under 35 U.S.C. § 134 from the Examiner's decision rejecting claims 1-50. We have jurisdiction over this appeal under 35 U.S.C. § 6 (2002).

The Invention

Appellant's claimed invention is directed to a urination apparatus for urine sample collection, waste urine collection for disposal of urine resulting from urination away from toilets, and simplification of urination by women without sitting on a toilet (Spec. 1:3-7). This appeal involves four independent claims, which read as follows:

> 1. A urine funnelling trumpet comprising:
>
> a relatively narrow outlet aperture flaring out to a bell with a rim defining a perimeter of a urine inlet area;
>
> wherein the inlet area has a long axis with a pubic locating portion extending from one end of the axis to meet a vaginal locating portion extending from the other end of the axis, the inlet area having a substantially symmetrical curvature about said axis;
>
> wherein the inlet area of the vaginal locating portion has a vaginal locating curvature along said axis and the inlet area of the pubic locating portion has a pubic locating curvature along said axis;
>
> wherein there is substantially a discontinuity in curvature substantially where the pubic locating portion and vaginal locating portion meet such that the pubic locating portion is inclined relatively towards the vaginal locating portion;
>
> wherein the outlet aperture has an axis which extends therefrom;
>
> wherein a radius bisects the arc subtended by the vaginal locating curvature; and
>
> wherein there is an included angle of between 125° to 145° between said outlet aperture axis and the bisecting radius.

20. A urine funnelling trumpet comprising:

a relatively narrow outlet aperture having an edge which flares out to a bell with a rim defining a perimeter of a urine inlet area;

wherein the inlet area has a long axis with a pubic locating portion extending from one end of the axis to meet a vaginal locating portion extending from the other end of the axis, the inlet area having a substantially symmetrical curvature about said axis;

wherein the inlet area of the vaginal locating portion has a vaginal locating curvature along said axis and the inlet area of the pubic locating portion has a pubic locating curvature along said axis;

wherein there is substantially a discontinuity in curvature substantially where the pubic locating portion and vaginal locating portion meet such that the pubic locating portion is inclined relatively towards the vaginal locating portion;

wherein the outlet aperture is located at least partially within an arc subtended by the vaginal locating curvature.

37. A urine funnelling trumpet comprising:

a relatively narrow outlet aperture flaring out to a bell with a rim defining a perimeter of a urine inlet area;

wherein the inlet area has a long axis with a pubic locating portion extending from one end of the axis to meet a vaginal locating portion extending from the other end of the axis, the inlet area having a substantially symmetrical curvature about said axis;

wherein the inlet area of the vaginal locating portion has a vaginal locating curvature along said axis and the inlet area of the pubic locating portion

has a pubic locating curvature along said axis which is tilted to be inclined relatively towards the vaginal locating curvature;

wherein the side of the bell flaring out from the outlet aperture meets the pubic locating portion at the rim substantially as a tangent to the pubic locating curvature to provide a generally flat surface in that region.

50. A urine sample collection apparatus comprising:

a generally elongate tubular portion having an outlet in the side thereof including a coupling formed for releasably mounting an open topped urine sample collection container thereto in a direction extending at a fixed angle other than a right angle from the axis of said tubular portion; and

a receptor for reception of urine, the receptor having a surface portion extending from a rim, which bounds a generally concave shaped inlet surface, to an aperture from which said tubular portion extends in a direction generally away from said inlet surface;

wherein the edge of the rim on the side corresponding to said outlet is displaced along the axis of the tubular portion further from said aperture than the opposing edge of said rim.

The Rejection

Appellant seeks review of the Examiner's rejection of claims 1-50 under 35 U.S.C. § 103(a) as unpatentable over Steer (US 4,568,339, issued February 4, 1986).[1,2]

The Examiner provides reasoning in support of the rejection in the Answer (mailed June 21, 2006). Appellant presents opposing arguments in the Appeal Brief (filed April 12, 2006) and Reply Brief (filed August 21, 2006). Appellant's representative presented oral argument on January 24, 2008.

OPINION

Appellant's Appeal Brief includes separate arguments for each of the independent claims 1, 20, 37, and 50 and states, in effect, that the dependent claims stand or fall together with the independent claim from which they depend (App. Br. 5). We observe, however, that Appellant's representative has made absolutely no effort to comply with the provision in 37 C.F.R. § 41.37(c) (1)(vii) that "[a]ny claim argued separately should be placed

---

[1] The Examiner relies on Steer in combination with the additional teachings of Craig (GB 2 092 690 A, published August 18, 1982) in rejecting claims 12-15, 19, 29, 30, 34-36, and 46-50 (Ans. 7). There is some dispute as to whether and to what extent the teachings of Craig relied upon by the Examiner are incorporated by reference in Steer. In any event, to the extent that any teachings of Craig relied upon by the Examiner are not incorporated by reference in Steer, Appellant considers the rejection to be based on the combination of Steer and Craig. We do likewise in our decision.

[2] Appellant also seeks review of the Examiner's objection to claim 3 as lacking sufficient antecedent basis for "the rim" (App. Br. 4). That issue is reviewable by petition under 37 C.F.R. § 1.181 and is not within the jurisdiction of the Board. *In re Mindick*, 371 F.2d 892, 894 (CCPA 1967). *See Manual of Patent Examining Procedure* (MPEP) §§ 1002 and 1201.

under a subheading identifying the claim by number." Inasmuch as there is no ambiguity as to which claims are separately argued, we will nevertheless consider each of Appellant's independent claims as separately argued, with the dependent claims standing or falling with the independent claim from which they depend. Appellant's representative is strongly advised to review the provisions of 37 C.F.R. § 41.37 and to comply with these provisions in the future.

Claim Interpretation

When construing claim terminology in the United States Patent and Trademark Office (USPTO), claims are to be given their broadest reasonable interpretation consistent with the specification, reading claim language in light of the specification as it would be interpreted by one of ordinary skill in the art. *In re Am. Acad. of Sci. Tech. Ctr.*, 367 F.3d 1359, 1364 (Fed. Cir. 2004).

From our review of the disclosure on page 30 of Appellant's Specification and in Appellant's Figure 7, it is apparent that: (1) the "inlet area" recited to in claims 1, 20, and 37 corresponds to rim 5C of Appellant's receptor; (2) the "pubic locating portion" and "vaginal locating portion" of claims 1, 20, and 37 correspond to portions of the rim 5C; and (3) the "vaginal locating curvature" and "pubic locating curvature" recited in claims 1, 20, and 37 relate to the curvature of the "vaginal locating portion" and "pubic locating portion," respectively, of the rim 5C. We reach this conclusion because Appellant states that "[t]he rim defines an inlet surface for the urine funnelling trumpet" (Spec. 30:16-17), that "[t]he part of the rim between the point P and the points M defines a pubic locating portion 6 which has a radius of curvature RP" (Spec. 30:24-26), and that "[t]he part of

the rim between the point V and the points M defines a vaginal locating portion 7 which has a radius of curvature RV" (Spec. 30:27-29). Moreover, the radii RP and RV are illustrated in Appellant's Figure 7 with respect to portions 6 and 7 of the rim 5C.

Appellant's Specification also states, on page 30, in lines 30-32, that "[t]aken along the axis X, the pubic locating portion 6 subtends an arc having an angle θP whilst the vaginal locating portion 7 subtends an arc having an angle θV." The arcs and angles θP and θV are illustrated in Appellant's Figure 7. The axis X, labeled in Appellant's Figure 9, is described by Appellant as the long axis of the rim 5C extending between end points P and V (Spec. 30:21-22). Clearly, the pubic and vaginal locating portions of rim 5C do not subtend arcs having angles θP and θV, respectively, on the axis X, as they only pass through the axis X in the vicinity of points P and V, respectively. Likewise, the vaginal locating portions and pubic locating portions do not have vaginal and pubic locating curvatures on the axis X. Thus, consistent with Appellant's Specification and drawings, we construe the claim language "along[3] said axis" in the sense of beside or throughout the length of said axis (the long axis of the inlet area or rim) or in the direction of said axis.

We also note, with reference to Appellant's Figure 7, that Appellant's outlet aperture 2C is not even partially within the arc formed by the vaginal locating curvature of the vaginal locating portion of the rim 5C. Rather, the best that can be said of Appellant's outlet aperture 2C is that it is located at

---

[3] The term "along" is defined as "on or beside the length of; over or throughout the length of." *Webster's New World Dictionary* 39 (David B. Guralnik ed., 2nd Coll. Ed., Simon & Schuster, Inc. 1984).

least partially within an arc that subtends the angle defined by the vaginal locating curvature of the vaginal locating portion of the rim 5C. We thus construe the limitation in claim 20 "wherein the outlet aperture is located at least partially within an arc subtended by the vaginal locating curvature" as requiring that the outlet aperture be located at least partially within an arc that subtends the angle defined by the vaginal locating curvature of the vaginal locating portion of the rim.

Claims 1-19

Steer discloses a female incontinence device including a basin 10 with an integral outlet pipe 12 and a pair of peripheral deflectable walls 14 and 16 and laterally extending flange 18 for connection of the device to a suitable woman's garment, such as panties (col. 4, ll. 55-60). The deflectable walls 14 and 16 "define a specially shaped saddle configuration designed to contact the wearer between the base of the vagina and the anus and located at the rear zone of the device in order to minimize the possibility of leakage at this area" (col. 4, ll. 23-28). As illustrated in Figures 4 and 8, the walls 14 and 16 "rise to a rounded cusp or peak 32 which, when the device is worn, is located between the base of the vagina (rearward side) and the anus" (col. 5, ll. 48-50). Appellant argues that Steer does not disclose or suggest where the device of Steer fits to the female anatomy or provide any reference to any dimension of Steer's device relative to a woman (App. Br. 6). While it is true that Steer does not specify where the front portion of the device is designed to fit along the female anatomy, common sense certainly dictates that the forward end of the device must extend forward of the urethra orifice and at least into the front pubic area in order for the device to receive urine from the urethra orifice.

Appellant further takes issue with the Examiner's annotated version of Figure 1 of Steer, reproduced in the Evidence Appendix of the Appeal Brief as Exhibit 2, and appears to argue that Steer does not disclose a vaginal locating portion having a vaginal locating curvature along the long axis of the inlet area and a pubic locating portion having a pubic locating curvature along the long axis of the inlet area, wherein there is "substantially a discontinuity in curvature substantially where the pubic locating portion and vaginal locating portion meet such that the pubic locating portion is inclined relatively towards the vaginal locating portion" as called for in claim 1 (App. Br. 7). We do not agree with Appellant. We illustrate our findings by reference to Steer's Figure 1, with dotted lines added to illustrate the rearward and forward extremes of what we find to be the vaginal locating portion and with the radius bisecting the arc subtended by the vaginal locating curvature of the vaginal locating portion shown in the form of a solid line. We also denote the outlet aperture axis with a dashed line in the reproduction of Steer's Figure 1. The rear end of the device is at the right-hand side of Figure 1 and the front side of the device is at the left-hand side of Figure 1 (col. 5, ll. 20-23). At approximately or "substantially" where the pubic locating portion and vaginal portion meet (the intersection of the walls 14, 16 with the left-most dotted line), we find there is substantially a discontinuity, that is, a noticeable change, in curvature, such that the pubic locating portion is inclined (upwardly as shown in Figure 1) relatively towards the vaginal locating portion, and the vaginal locating portion is inclined relatively towards the pubic locating portion.

Steer's Figure 1, with annotations, is reproduced below:

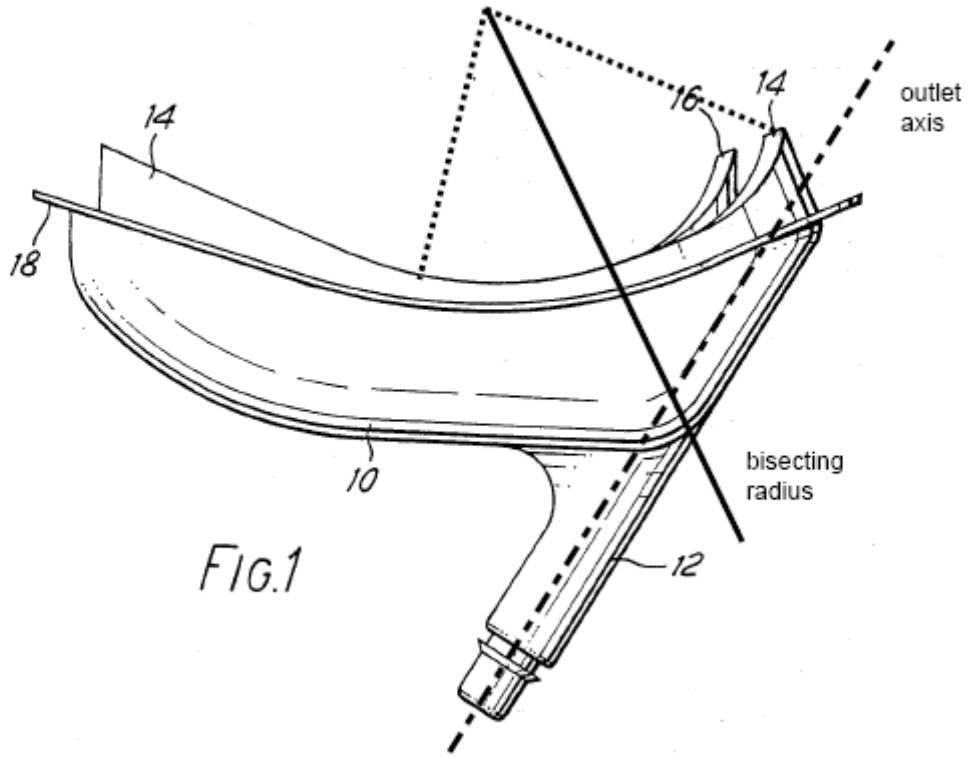

Figure 1 is a side elevation of one example of Steer's female incontinence device and depicts the deformable walls 14 and 16, the flange 18, and the basin 10 and integral outlet pipe 12. The front end of the device is depicted at the left-hand side of the reproduced Figure 1 and the rear end of the device is depicted at the right-hand side of Figure 1. In Steer's Figure 1 as reproduced herein, dotted lines have been added to depict the front and rear extremes of what we find to be the vaginal locating portion, a solid line labeled "bisecting radius" is added to depict the radius bisecting the arc subtended by the vaginal locating curvature of the vaginal locating portion, and a dashed line labeled "outlet axis" is added to depict the axis of the outlet pipe 12. The bisecting radius and the outlet axis intersect to define an

obtuse included angle, which appears to fall within the range of between 125° and 145°.

We recognize that the configuration of Steer's deformable walls 14 and 16 differs from that of Appellant's rim 5C, but Appellant has not sufficiently defined that distinction in claim 1. As stated by our reviewing court in *In re Hiniker Co.*, 150 F.3d 1362, 1369 (Fed. Cir. 1998), "*the name of the game is the claim*." Based on our findings as detailed above, with reference to the annotated Figure 1 of Steer, there is substantially a discontinuity in curvature substantially where the pubic and vaginal locating portions meet, such that the pubic locating portion is inclined (upwardly as depicted in Steer's Figure 1) relatively towards the vaginal locating portion of Steer's deformable walls 14 and 16. Moreover, the included angle between the outlet aperture axis and the bisecting radius appears to be within the range "between 125° and 145°" recited in Appellant's claim 1. We thus conclude that any difference between such included angle and the range recited in claim 1 does not constitute a patentable distinction. *See In re Woodruff*, 919 F.2d 1575, 1578 (Fed. Cir. 1990) (In cases in which the difference between the claimed invention and the prior art is some range or other variable within the claims, "the applicant must show that the particular range is *critical*, generally by showing that the claimed range achieves unexpected results relative to the prior art range.")

For the above reasons, Appellant's arguments do not persuade us the Examiner erred in rejecting claim 1 as unpatentable over Steer. The rejection of claim 1, as well as claims 2-11 and 16-18 standing or falling with claim 1, as unpatentable over Steer is sustained.

In electing to have claims 12-15 and 19 stand or fall with claim 1, Appellant relies solely on the arguments made with respect to claim 1 for the patentability of claims 12-15 and 19. The arguments raised with respect to claim 1 likewise fail to persuade us the Examiner erred in rejecting claims 12-15 and 19 as unpatentable over the combination of Steer and Craig. The rejection of claims 12-15 and 19 is thus also sustained.

Claims 20-36

Appellant argues that it "would not have been obvious to a person of ordinary skill in the art to arrange the outlet aperture at least partially in the vaginal locating portion as specified in claim 20" (App. Br. 7-8). As noted above, we construe the limitation of claim 20 at issue as requiring that the outlet aperture be located at least partially within an arc that subtends the angle defined by the vaginal locating curvature of the vaginal locating portion of the rim. It is readily apparent from review of the reproduction of Steer's Figure 1 above that Steer's outlet aperture is clearly located within an arc that subtends the angle defined by the vaginal locating curvature of the vaginal locating portion of the rim (walls 14 and 16), that is, the included angle between the two dotted lines showing the extremes of the vaginal locating portion, thereby satisfying the claim language.

For the above reason, Appellant's argument does not persuade us the Examiner erred in rejecting claim 20 as unpatentable over Steer. The rejection of claim 20, as well as claims 21-28 and 31-33 standing or falling with claim 20, is also sustained.

In electing to have claims 29, 30, and 34-36 stand or fall with claim 20, Appellant relies solely on the argument raised with regard to claim 20 for the patentability of claims 29, 30, and 34-36. For the reason discussed

above, Appellant's argument with regard to claim 20 likewise fails to persuade us the Examiner erred in rejecting claims 29, 30, and 34-36 as unpatentable over the combination of Steer and Craig. The rejection of claims 29, 30, and 34-36 is thus also sustained.

Claims 37-49

Independent claim 37 requires that the side of the bell flaring out from the outlet aperture *meet the pubic locating portion at the rim substantially as a tangent* to the pubic locating curvature to provide a generally flat surface[4] in that region. The front or pubic locating portion of the walls 14, 16 of Steer's female incontinence device is at the left-hand side of Steer's Figures 1 and 3. The (bottom) side of the basin 10 of Steer's device does *not* meet walls 14, 16, much less at anything even remotely close to a tangent to the pubic locating curvature of the walls 14, 16. Nor does the Examiner contend that it would have been obvious to modify Steer's device so as to meet that claim limitation. Appellant's argument on page 8 of the Appeal Brief thus demonstrates the Examiner erred in rejecting claim 37 as unpatentable over Steer. The rejection of claim 37, as well as claims 38-45 depending from claim 37, as unpatentable over Steer cannot be sustained. The Examiner does not rely on Craig for any teaching that would remedy the deficiency in

[4] The side of the bell flaring out from the outlet aperture and meeting the pubic locating portion at the rim substantially as a tangent is depicted in Appellant's Figures 8 and 9 as a substantially curved *surface*, not a generally flat surface. While it appears that the intersection of the surface at issue with the vertical plane passing through the X axis, as depicted in Figure 7, is a line, the surface itself is not flat, at least not in three dimensions. The Examiner and Appellant should consider whether the language "to provide a generally flat surface" in claim 37 should be amended to more accurately describe the surface depicted in Figures 7-9 of the present application.

Steer. Thus, the rejection of claims 46-49 as unpatentable over the combination of Steer and Craig also cannot be sustained.

Claim 50

Appellant argues that Steer's tubular portion (outlet pipe 12) does not have an outlet in the side thereof, as required in claim 50 (Reply Br. 3). We agree. Referring to Figure 1 of Craig, the Examiner points out that Steer's outlet tube 12 is configured such that any storage device attached thereto, either directly or via additional tubing, will extend away from the axis of the tubular portion (Ans. 7). Even assuming that were correct,[5] the Examiner has not pointed out where either Steer or Craig teaches a tubular portion having an outlet *in the side thereof*, as required in claim 50, or explained why it would have been obvious to modify Steer to provide such a tubular portion. Appellant's argument thus demonstrates the Examiner erred in rejecting claim 50. The rejection cannot be sustained.

[5] It is not apparent to us how the Examiner reaches this conclusion.

CONCLUSION

The decision of the Examiner to reject claims 1-50 is affirmed as to claims 1-36 and reversed as to claims 37-50.

No time period for taking any subsequent action in connection with this appeal may be extended under 37 C.F.R. § 1.136(a). *See* 37 C.F.R. § 1.136(a)(1)(iv) (2007).

AFFIRMED-IN-PART

hh

LAUBSCHER & LAUBSCHER, P.C.
1160 SPA ROAD
SUITE 2B
ANNAPOLIS, MD 21403