UNITED STATES PATENT AND TRADEMARK OFFICE

BEFORE THE BOARD OF PATENT APPEALS
AND INTERFERENCES

Ex parte PENHASI

Appeal 2007-2534
Application 10/312,712
Technology Center 3700

Decided: 13 December 2007

Before RICHARD E. SCHAFER, SALLY GARDNER LANE, and JAMES T. MOORE *Administrative Patent Judges*.

LANE, *Administrative Patent Judge*.

DECISION ON APPEAL

I. STATEMENT OF THE CASE

This is a 35 U.S.C. § 134 appeal in the above-referenced case. We have jurisdiction under 35 U.S.C. § 6(b) to review the rejections of the claims. We affirm-in-part and reverse-in-part.

The field of the claimed invention is vascular stents, which provide mechanical scaffolding to blood vessels after procedures such as balloon angioplasty. (Specification at 1). While stents are often made of metal, the claimed stents are made of both thermoplastic elastomeric polymers and

thermoplastic non-elastomeric polymers. (Specification at pp. 3-4). It is said that these stents do not rely on only their "memory" of a previous shape to conform to the shape of the vessel in which they are inserted, but can be more specifically positioned because of the nature of the polymers. (Specification at p. 2).

Three different embodiments of the stents are represented in the independent claims:

> Claim 20. A biocompatible non-memory expandable polymeric stent, adapted to be positioned in a body lumen,
>
> that is at least in part biodegradable and
>
> that is formed from a combination of at least one thermoplastic elastomeric polymer and at least one thermoplastic non-elastomeric polymer that has a glass transition temperature greater than 40°C,
>
> said stent being selected from the group of porous stents and stents that have a potential to become porous by action of body fluids *in situ*,
>
> said thermoplastic non-elastomeric polymer being present in such an amount, constituting at least 10% by weight of the total of elastomeric and non-elastomeric polymers, as will provide mechanical strength and rigidity to the stent when in an expanded mode, and
>
> wherein said at least one thermoplastic elastomeric polymer and at least one thermoplastic non-elastomeric polymer are in integral combination as a polymer blend of said at least one elastomeric polymer and said at least one non-elastomeric polymer,
>
> provided that said polymer blend does not consist of polyethylene oxide and polycaprolactone, as said at least one elastomeric and non-elastomeric polymers, respectively.
>
> Claim 23. A biocompatible non-memory expandable polymeric stent
>
> containing one helical element only and a hollow cylindrical element,

wherein said helical element is adapted to be encased within the hollow part of said cylindrical element, and

wherein said stent is adapted to be positioned in a body lumen, is at least in part biodegradable and

includes a combination of at least one thermoplastic elastomeric polymer and at least one thermoplastic non-elastomeric polymer that has a glass transition temperature greater than 40°C,

said stent being selected from the group of porous stents and stents that have a potential to become porous by action of body fluids *in situ*,

said thermoplastic non-elastomeric polymer being present in such an amount as will provide mechanical strength and rigidity to the stent when in an expanded mode, and

wherein said hollow cylindrical element is formed from said elastomeric polymer, and

said one helical element is formed from said non-elastomeric polymer that is substantially biodegradable and said stent is adapted to provide necessary mechanical support at the lumen surface.

Claim 33. A biocompatible non-memory expandable polymeric stent, adapted to be positioned in a body lumen,

that is at least in part biodegradable and that is formed from a combination of at least one thermoplastic elastomeric component and at least one thermoplastic non-elastomeric component that has a glass transition temperature greater than 40°C,

said stent being selected from the group of porous stents and stents that have a potential to become porous by action of body fluids *in situ*,

said thermoplastic non-elastomeric component being present in such an amount, constituting at least 10% by weight of the total of elastomeric and non-elastomeric polymers, as will provide mechanical strength and rigidity to the stent when in an expanded mode, and

wherein said at least one thermoplastic elastomeric component and at least one thermoplastic non-elastomeric component are in integral combination as at least one block copolymer, comprising at least one soft segment as said

elastomeric component and at least one hard segment as said non-elastomeric component, and

wherein said at least one block copolymer exhibits a two-phase structure at 37°C.

In addition, pending claims 30 and 31 depend from independent claim 20; pending claims 29 and 32 depend from independent claim 23; and pending claims 34 and 35 depend from independent claim 33. Appellant did not argue separately for the patentability of these dependent claims in the Appeal Brief. 37 CFR 41.37(c)(vii). Instead, Appellant states that the patentability of these dependent claims should be determined based on the patentability of the independent claims from which they depend. (Appeal Brief at p. 11). Therefore we will not discuss or consider the individual elements of these dependent claims. *See In re Dance*, 160 F.3d 1339, 1340, n.2 (Fed. Cir. 1998).

The Examiner rejected claims 20, 30, and 31 under 35 U.S.C. § 112, first paragraph, for a lack of written description. Claims 23, 29, and 32 were rejected under 35 U.S.C. § 103 over U.S. Application Publication No. 2002/0169499 ("Zilla"). Claims 20, 30, 31, 33, 34, and 35 were rejected under 35 U.S.C. § 103 over U.S. Patent No. 5,578,075 ("Dayton") or U.S Patent No. 6,699,276 ("Sogard").

II. ISSUES

The issues are:

(1) Whether Appellant has shown that the Examiner erred in rejecting claims 20, 30, and 31 under 35 U.S.C. § 112, first paragraph for a lack of written description.

(2) Whether Appellant has shown that the Examiner erred in rejecting claims 23, 29, and 32 under 35 U.S.C. § 103 as being obvious over Zilla.

(3) Whether Appellant has shown that the Examiner erred in rejecting claims 20, 30, 31, 33, 34, and 35 under 35 U.S.C. § 103 as being obvious over Dayton.

(4) Whether Appellant has shown that the Examiner erred in rejecting claims 20, 30, 31, 33, 34, and 35 under 35 U.S.C. § 103 as being obvious over Sogard.

III. FINDINGS OF FACT

The following findings of fact are supported by a preponderance of the evidence.

1. The stents claimed in claims 23, 29, and 32 are limited to components of a particular shape, specifically "one helical element" and a "hollow cylindrical element." (Claim 23).

2. The "hollow cylindrical element" is formed from an "elastomeric polymer" and the "one helical element" is formed from a "non-elastomeric polymer." (*Id.*).

3. Furthermore, the "helical element is adapted to be encased within the hollow part of said cylindrical element." (*Id.*).

4. Figure 1 of Appellant's specification is reproduced below.

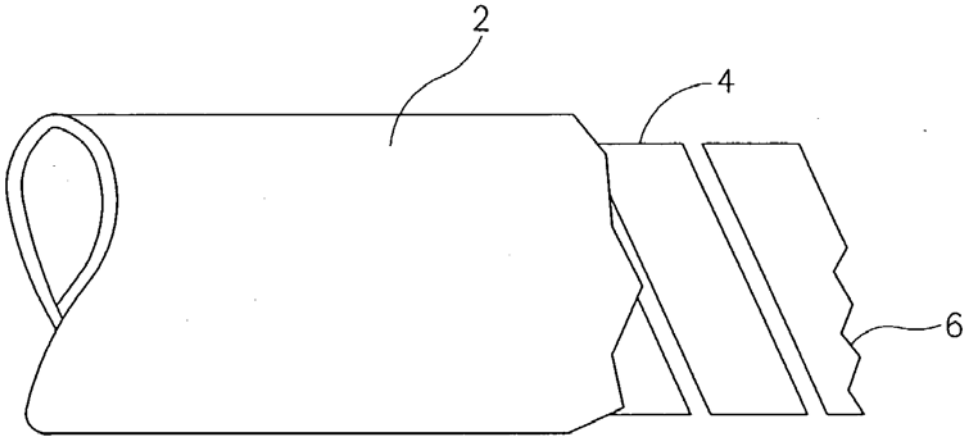

FIG.1

Figure 1 is a picture of a stent with a helical element (4) inserted within the "hollow part" of cylindrical element (2).

5. The prior art reference Zilla discloses a vascular prosthesis or graft that matches the mechanical properties of the host in which it is placed and includes channels that promote the growth of connective tissue. (Zilla at [0031] - [0033]).

6. Zilla provides that "[h]elical channels are formed in the vascular graft by winding an extractable fiber into the graft material before the graft is set." (*Id.* at [0036]).

7. Figure 3 of Zilla is reproduced below.

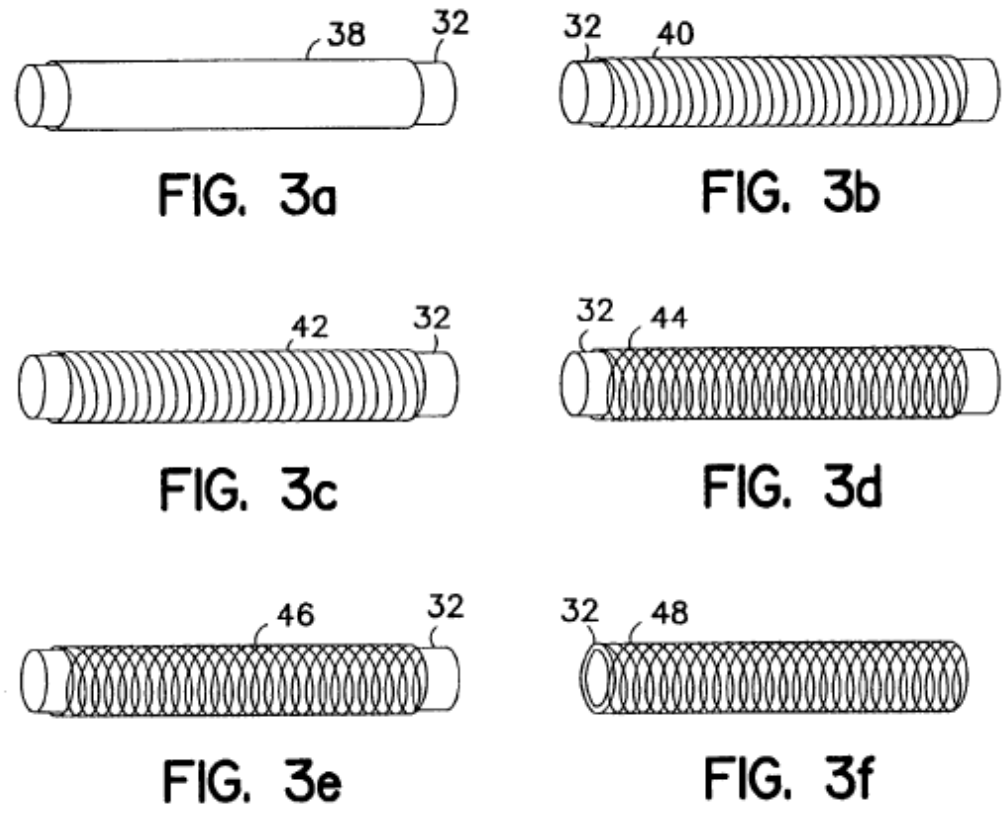

Figure 3 provides a picture of the stages of preparation of the graft described in Zilla. As depicted in panels (a) and (b), and explained in [0046], the graft material, or "paste," (38) is applied to a mandrel (32) to create the body of the graft. An extractable fiber (40) is then wound into this layer of paste to create the channels. Successive layers of paste and fiber can be applied, as shown in panels (c) through (f), creating layers of channels within the walls of the graft.

8. Zilla discloses that the graft material is any polymeric or other material, and provides examples of suitable materials as thermoplastic elastomers, including thermoplastic polyurethanes. (*Id.* at [0024]).

9. Zilla also discloses that an additional, non-extractable fiber can be included in the graft to provide initial strength to the graft. (*Id.* at [0022]).

10. These non-extractable fibers are made of either elastic or non-elastic polymeric material, or a combination of elastic and non-elastic polymeric materials. (Zilla at [0022] and [0041]).

11. The specification of Zilla does not provide for placement of the non-extractable fiber specifically within the space left by extraction of the extractable fiber.

12. Appellant's claims 20, 30 and 31 are limited to the elastomeric polymer and non-elastomeric polymer being "in integral combination as a polymer blend," with the proviso that the polymer blend does not consist of polyethylene oxide and polycaprolactone, as the elastomeric and non-elastomeric polymers, respectively.

13. Appellant's claims 33, 34, and 35 are limited to the elastomeric polymer and non-elastomeric polymer being "in integral combination as at least one block copolymer, comprising at least one soft segment as said elastomeric component and at least one hard segment as said non-elastomeric component."

14. Dayton discloses stents comprising different materials. While Dayton discloses metallic stents, it also discloses stents coated in polymers

> having a microporous structure, such as silicone, polyurethane, polyvinyl alcohol, polyethylene, biodegradable polylactic acid polymers, polyglycolic acid polymers, polyesters, hydrogels, tetrafluroethylene and polytetrafluroethylene, fluorosilicone, hyaluronte and combinations, copolymers and blended mixtures thereof.

(Dayton at col. 4, ll. 8-13).

15. Dayton also discloses stents that are made entirely from polymers, wherein

> [i]f the stent is formed from a polymer, these same polymeric materials may be employed, although some may need to be structurally reinforced. Also useful as a polymeric stent is polymethylmethacrylate, which is an example of the generic class of structurally adequate polymers without reinforcement.

(*Id*. at col. 4, ll. 14-19).

16. Polyurethane, disclosed in Dayton at col. 4, ll. 8-9, is an elastomeric polymer, as described in Appellant's specification at p. 8.

17. "Biodegradable polylactic acid polymers," disclosed in Dayton at col. 4, ll. 9-10, is a non-elastomeric polymer, as provided in Appellant's specification at p.8 ("poly(L-lactide), poly(D-lactide), polyD,L-lactide")[1] and in the Examples.

IV. ANALYSIS

35 U.S.C. § 112, first paragraph

The Examiner contends that claims 20, 30, and 31 lack written description support because these claims recite the negative limitation, "provided that said polymer blend does not consist of polyethylene oxide and polycaprolactone, as said at least one elastomeric and non-elastomeric polymers, respectively." The Examiner's concern is that this limitation is not expressly provided in the specification. Instead, the specification expressly recites that polyethylene oxide and polycaprolactone may be used in embodiments of the invention. (Specification at 8).

[1] We understand these to by polylactic acid polymers.

In other words, Appellant has limited the claims to less than is described in the specification as being useful in its invention. We do not find this to be in violation of the written description requirement of 35 USC §112, ¶1. We find that the written description requirement is met under the circumstances presented, *see In re Johnson*, 558 F.2d 1008, 1019 (C.C.P.A. 1977), and reverse the rejection of claims 20, 30, and 31 under 35 U.S.C. § 112, first paragraph.

35 USC §103(a) - Zilla

The Examiner rejected claims 23, 29, and 32 under 35 U.S.C. § 103(a) as being rendered obvious by Zilla. Because the Examiner erred in finding that the disclosure of Zilla renders the invention of claims 23, 29, and 32 obvious, we reverse this rejection.

An invention is not patentable "if the differences between the subject matter sought to be patented and the prior art are such that the subject matter as a whole would have been obvious at the time the invention was made to a person having ordinary skill in the art to which said subject matter pertains." under 35 U.S.C. § 103. In *Graham v. John Deere Co. of Kansas City*, 383 U.S. 1, 17 (1966), the Supreme Court provided factors for the determination of obviousness, including the "scope and content of the prior," the "differences between the prior art and the claims at issue," and the "level of ordinary skill in the pertinent art." *See also KSR Int'l Co. v. Teleflex Inc.*, 127 S.Ct. 1729, 1734 (2007). The scope of the disclosure in Zilla does not encompass the scope of the claims.

Zilla discloses a graft prepared by applying a paste to a mandrel, winding fibers around it, and applying more paste over the first fibers. The only "hollow cylindrical element" disclosed in Zilla is the graft structure that remains when the graft is removed from the mandrel. There is no separate

mechanical helical element "encased within the hollow part" of this cylindrical element. Any helical structure is within the wall of Zilla's cylindrical element. Furthermore, there is no "hollow" between the layers of paste applied to the mandrel, because the next layer is applied directly on top of the previous layer with its fiber. (*See* Examiner's Answer at p. 11).

Therefore, we conclude that the Examiner erred in determining that the claim element of a "helical element . . . adapted to be encased within the hollow part of said cylindrical element" is disclosed in Zilla. The Examiner has not articulated a sufficient reason why one skilled in the art would have modified Zilla and arrived at the presently claimed subject matter. Accordingly, we reverse the rejection of claims 23, 29, and 32 as being obvious under 35 U.S.C. § 103 over Zilla.

<u>35 USC § 103(a) - Dayton</u>

Claims 20, 30, 31, 33, 34, and 35 were rejected under 35 U.S.C. § 103 (a) as being obvious over Dayton. Because the Examiner correctly determined that the disclosure of Dayton renders the invention claimed in claims 20, 30, 31, 33, 34, and 35 obvious, we affirm the rejection of these claims under 35 U.S.C. § 103.

Dayton expressly teaches the combination of a species of elastomeric polymer, polyurethane, and a species of non-elastomeric polymer, polylactic acid polymers. (FF[2] 13). Though Appellant argues that Dayton does not teach the combination of a choice from the genus of elastomeric polymers and a choice from the genus of non-elastomeric polymers, this is of no moment because combinations of the polymers Dayton lists are expressly within the Dayton disclosure. *See Perricone v. Medicis Pharm. Corp.*, 432 F.3d 1368, 1376 (Fed. Cir. 2005) ("This court rejects the notion that one of

[2] Finding of fact.

these ingredients cannot anticipate because it appears without special emphasis in a longer list. To the contrary, the disclosure is prior art to the extent of its enabling disclosure.”).

Furthermore, even though Dayton does not disclose polyurethane as an “elastomeric” polymer and polylactic acid as a “non-elastomeric” polymer, Dayton does not “teach away” from the combination, as Appellant argues. (Appeal Brief at p. 19 and 28). Dayton does not discourage one from using this combination and so does not teach away from any particular polymer combinations. *See In re Gurley*, 27 F.3d 551, 553 (Fed. Cir. 1994) (“in general, a reference will teach away if it suggests that the line of development flowing from the reference's disclosure is unlikely to be productive of the result sought by the applicant.”).

Similarly, the teaching in Dayton of polymethylmethacrylate as a reinforcing material does not teach away from the element in Appellant’s claims that mechanical strength and rigidity are provided by non-elastomeric polymers, as Appellant argues, *see* Appeal Brief at 20, because the mere citing of one type of material would not discourage the use of any other. Moreover, Appellant’s claims do not exclude “structural reinforcement” of the polymeric materials used.

In response to the Examiner’s assertion that the ratio of 10 % non-elastomeric polymer in the claimed combination would be obtained by routine optimization, Appellant merely argues that the lack of disclosure of the 10% non-elastomeric polymer in Dayton renders the Examiner’s assertion invalid. (Appeal Brief, at p. 19). Attorney argument is not evidence and under these circumstances is not sufficient to persuade us that one skilled in the art would not have had sufficient reasons to arrive at the claimed non-elastomeric polymer portion. See *In re Geisler*, 116 F.3d 1465,

1470 (Fed. Cir. 1997). For example, Appellant has presented no evidence that the 10% ratio is a critical limitation, e.g., that it produces unexpected results. We agree with the Examiner's understanding that this ratio would be obtained by those in the art seeking to optimize the parameters of Dayton.

Finally, Appellant argues that Dayton does not disclose the element in claim 33 of a "block copolymer, comprising at least one soft segment as said elastomeric component and at least one hard segment as said non-elastomeric component . . . ." *See* Appeal Brief at p. 29. Dayton does disclose that the different polymers recited can be presented in "combination, copolymers, and blended mixtures thereof," col. 4, ll. 12-13, but according to Appellant

> [t]he terms "combinations" and "blended mixtures" are far too vague to constitute disclosure of the specifically defined block copolymers in claim 33. Moreover the term 'copolymers' would be understood by a person of the art as referring to two different monomers which are (randomly) copolymerized together, but the result of course would not be a block copolymer.

(Appeal Brief at p. 29). The Examiner found that "[b]ecause Dayton has disclosed use of the same materials in combination, and the co-monomers (starting material) are the same as used by the applicant, the resulting blend will result inherently and have the capability to result in the block format, as the applicants has." (Examiner's Answer at p. 13).

We are not convinced that those in the art would necessarily consider the term "copolymer" in the context of the Dayton reference to mean that the different monomers are only randomly copolymerized together, as Appellant argues. Appellant has not supported his argument with evidence.

Finally, we note that Appellant has not taken issue with the Examiner's findings that (1) the element of a "glass transitional temperature

greater than 40ºC," recited in claims 20 and 33 is inherent in the disclosure of Dayton, *see* Final Office Action at p.5, and (2) the property of the block copolymer of claim 33 as exhibiting "a two-phase structure at 37ºC" is inherent in the block copolymer that would be formed, *see id*. Arguments not made by the Appellant are considered to be waived. 37 CFR 41.(c)(vii).

Accordingly, we find that Dayton renders the subject matter of claims 20, 30, 31, 33, 34, and 35 obvious and we affirm the rejection of the claims under 35 U.S.C. § 103.

35 U.S.C. § 103 – Sogard

The Examiner also rejected claims 20, 30, 31, 33, 34, and 35 as being obvious in light of Sogard, under 35 U.S.C. § 103. Because we have determined that these claims are unpatentable in light of Dayton, we need not and do not reach a decision of the effect of Sogard on patentability of these claims.

V. ORDER

Upon consideration of the record and for reasons given, it is

ORDERED that the rejection of claims 20, 30, and 31 under 35 U.S.C. § 112, first paragraph is REVERSED;

FURTHER ORDERED that the rejection of claims 23, 29, and 32 under 35 U.S.C. § 103, over Zilla is REVERSED;

FURTHER ORDERED that the rejection of claims 20, 30, 31, 33, 34, and 35, under 35 U.S.C. § 103, over Dayton is REVERSED; and

FURTHER ORDERED that the rejection of claims 20, 30, 31, 33, 34, and 35 under 35 U.S.C. § 103, over Sogard has not been considered.

AFFIRMED-IN-PART and REVERSED-IN-PART

NIXON & VANDERHYE, P.C.
901 N. Glebe Rd, 11th Floor
Arlington, VA 22203