The opinion in support of the decision being entered today was *not* written for publication and is *not* binding precedent of the Board

UNITED STATES PATENT AND TRADEMARK OFFICE

BEFORE THE BOARD OF PATENT APPEALS
AND INTERFERENCES

Ex parte JOHN LEE HAMMONS, RAPHAEL WARREN,
RONALD BOSMAN VISSCHER, JOSEPH ANTHONY GATTO,
BRIAN FRANCIS GRAY and AMY MARIE PRICE

Appeal 2007-2825
Application 10/262,036
Technology Center 3700

Decided: 29 June 2007

Before: FRED E. McKELVEY, *Senior Administrative Patent Judge*, and SALLY C. MEDLEY and MICHAEL P. TIERNEY, *Administrative Patent Judges*.

McKELVEY, *Senior Administrative Patent Judge*.

DECISION ON APPEAL

A. Statement of the case

John L. Hammons, Raphael Warren, Ronald B. Visscher, Joseph A. Gatto, Brian F. Gray and Amy Marie Price (hereafter "**P&G**") seek review under 35 U.S.C. § 134(a) of a final rejection of claims 1-20 and 22, the only claims remaining in the application on appeal.

We have jurisdiction under 35 U.S.C. § 6(b).

The application on appeal was filed on 01 October 2002.

The application was published as Publication 2004/0064117 A1 on 01 April 2004.

P&G does not claim benefit of any earlier filed application.

The real party in interest is The Procter & Gamble Company (P&G).

The Examiner rejected claims 1-20 and 22 (all of the claims) under 35 U.S.C. § 103(a) as being unpatentable over the combination of Roe and Elder. The reader should know that no references to *et al.* are made in this opinion.

The following prior art was relied upon by the Examiner.

Name	Patent Number	Issue Date
Roe	US 5,643,588	01 Jul. 1997
Elder	US 6,107,537	22 Aug. 2000

Roe and Elder are prior art under 35 U.S.C. § 102(b).

B. Record on appeal

In deciding this appeal, we have considered *only* the following documents:

1. Specification, including original claims.
2. Drawings.
3. Final Rejection entered 27 September 2005.
4. The Appeal Brief filed 30 January 2006.
5. The Examiner's Answer entered 19 April 2006
6. Roe.

7. Elder

8. PTO bibliographic data sheet for the application on appeal

9. Claims 1-20 and 22 on appeal as presented in the claims appendix of the Appeal Brief.

C. Issues

The issue on appeal is whether P&G has sustained its burden on appeal of establishing that the Examiner erred in rejecting the claims on appeal over the prior art.

D. Findings of fact

The following findings of fact are believed to be supported by a preponderance of the evidence. To the extent that a finding of fact is a conclusion of law, it may be treated as such. Additional findings as necessary may appear in the Discussion portion of the opinion.

<u>The invention</u>

The invention relates to catamenial devices, such as sanitary napkins, for the adsorption of menses. Specification 1:13-14.

According to P&G, disposable absorbent articles, such as diapers, training pants and catamenial devices having lotioned topsheets are known. Specification 1:20-21.

P&G tells us that known attempts at applying lotions to topsheets of absorbent products have been primarily directed to baby diapers. Specification 2:9-10.

P&G represents that little attention has been directed to the unique problems associated with the skin of an adult woman when wearing a catamenial pad. Specification 2:11-12.

According to P&G, there is a need for an improvement in catamenial devices to improve the skin and hair hygiene of menstruating women and for the catamenial device to have improved fluid handling so that more menses enters into and remains in the device, and less on the skin and hair of the wearer. Specification 2:30-33.

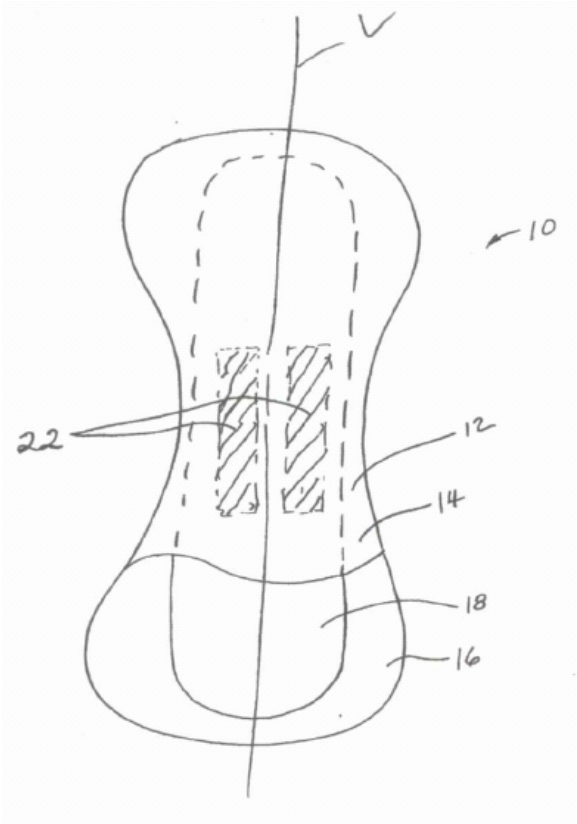

P&G Fig. 1—sanitary pad

Fig. 1 is a perspective, partially cut-away view of a catamenial device having a topsheet and a lotion composition. Specification 3:32-33.

With reference to Fig. 1, the P&G catamenial device **10** comprises (1) a body-contacting surface **12** with (2) a topsheet **14**, (3) a liquid impervious backsheet **16** joined to topsheet **14**, and (4) an absorbent core **18**, and backsheet **16**. Lotion composition **22** is shown in two stripes (cross-hatched areas). Specification 4:23-32.

Topsheet **14** and lotion composition **22** are said to offer significant advantages over known topsheets and lotions. Specification 4:33-34.

According to P&G, the lotion can transfer from the topsheet to the skin and hair of the wearer, which is said to serve to make the skin and hair hydrophobic as well. Specification 5:7-8.

We find no occasion to describe the details of the lotion composition, because (1) the Examiner and P&G appear to agree that the lotion composition is old and (2) on appeal P&G does not urge patentability based on the composition of the lotion.

With respect to the "stripe," P&G reveals that the lotion composition can be applied in a plurality of stripes. Specification 15:29-31.

In fact, P&G prefers that the lotion be applied in a plurality of stripes parallel to the longitudinal axis (Fig. 1 **L**—L looks somewhat like a V in Fig. 1 probably because the drawings are informal). Specification 16:19-20.

The use of stripes is said to allow both transfer of the lotion to a broader area of the vulva and improved fluid handling of the absorbent article. Specification 16:20-21.

The examples are written in the present tense and therefore we assume they are prophetic. Specification 18:24 through 20:9.

In any event, P&G does not indicate that experimental testing of the claimed devices vis-à-vis any prior art device appears in the specification.

Claims on appeal

P&G does not argue the separate patentability of claims 2-20 or 22 apart from claim 1. Accordingly, all claims stand or fall with claim 1.

Claim 1 reads [drawing numbers added]:

> A sanitary napkin for use in a vulvar region of an adult woman, said vulvar region comprising skin and hair and being subject to contact with menstrual fluid, said sanitary napkin comprising:
>
> A) a liquid impervious backsheet **16**;
>
> B) a liquid pervious, topsheet **14** joined to said backsheet, said topsheet having an inner surface oriented toward the interior of said absorbent article and an outer surface oriented toward the skin and hair of the wearer when said sanitary napkin is being worn, wherein at least a portion of said topsheet outer surface comprises an effective amount of a lotion coating **22** which is semi-solid or solid at 20 degrees C. said lotion coating comprising:
>
> (i) from about 10 to about 95% of a substantially water free emollient having a plastic or fluid consistency at 20 degrees C. wherein said emollient contains 5% or less water, said emollient comprising a member selected from the group consisting of petroleum-based emollients, fatty acid ester emollients, alkyl ethoxylate emollients, and mixtures thereof;

(ii) from about 5 to about 90% of an agent capable of immobilizing said emollient on said outer surface of the topsheet, said immobilizing agent being miscible with said emollient, said immobilizing agent having a melting point of at least 35 degrees C. wherein said immobilizing agent is selected from the group consisting of polyhydroxy fatty acid esters, polyhydroxy fatty acid amides, C14-C22 fatty alcohols, C14-C22 fatty acids, C14-C22 fatty alcohol ethoxylates, and mixtures thereof;

C) an absorbent core **18** positioned between said topsheet and said backsheet; and

D) wherein said lotion **22** is applied in a plurality of stripes parallel to a longitudinal axis **L** of said sanitary napkin.

<u>Roe</u>

Roe is owned by P&G.

Roe relates to absorbent articles, such a diapers, training pants, adult incontinence devices, and the like. Col. 1:4-6.

According to Roe, an absorbent article includes *inter alia* sanitary napkins. Col. 4:7-17; see also col. 5:2-5.

Further, according to Roe, a disposable absorbent article typically comprises a liquid pervious topsheet, a liquid impervious backsheet joined to the topsheet and an absorbent core positioned between the topsheet and the backsheet. Col. 4:19-22.

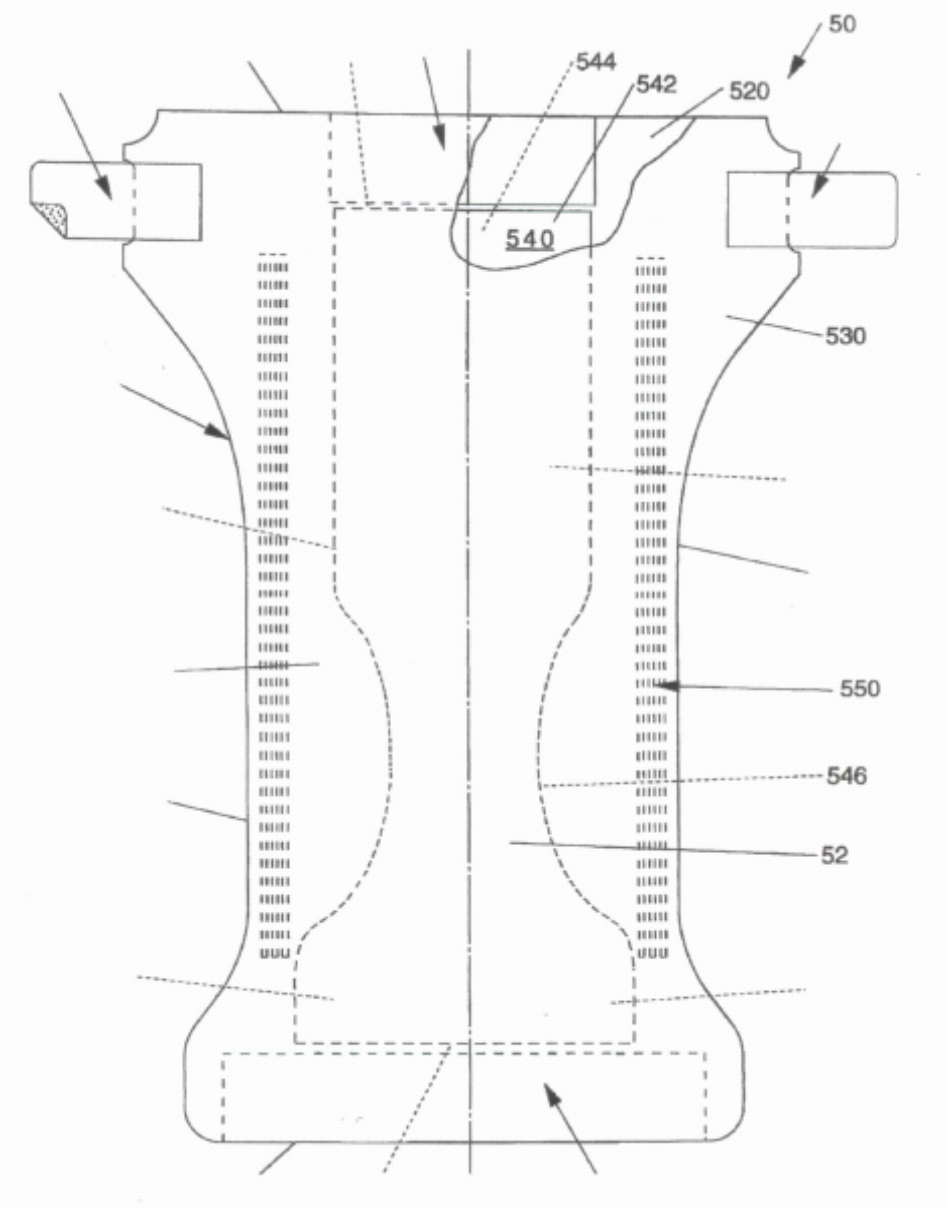

Roe Fig. 3--diaper

With reference to Roe Fig. 3 (from which some drawing element numbers have been deleted), there is shown an absorbent article in the form of a diaper **50** having a liquid impervious backsheet **530**, a liquid pervious (hydrophobic) topsheet **520** and an absorbent core **540** positioned between the topsheet **520** and the backsheet **530**. Col. 6:29-44.

A lotion is present. Col. 9:40-41.

The Examiner found that Roe differs from the subject matter of P&G claim 20 in that Roe does not describe the use of a plurality of stripes. Examiner's Answer 3:5-6. P&G agrees. Appeal Brief 2, fifth full paragraph.

The Examiner also found that Roe describes a lotion identical to that claimed by P&G. Examiner's Answer 5, last paragraph; Final Rejection 5, last paragraph. See also the Examiner's citation to Osborn U.S. Patent 5,891,126, a patent owned by P&G and which, while not relied upon by the Examiner, is said to describe the same lotion composition as Roe for use in a sanitary napkin. Final Rejection 2, next-to-last paragraph. P&G does not contest the fact that the claimed lotion is known for use in absorbent articles and does not base its arguments for patentability on the composition of the lotion.

<u>Elder</u>

Elder is owned by P&G.

It should be noted that a rather lengthy certificate of correction has been issued with respect to Elder.

Elder reveals that absorbent articles such as diapers, incontinence articles, catamenial devices, etc., are well known in the art. Col. 1:19-21.

According to Elder, typically disposable absorbent articles comprise a liquid pervious topsheet that faces the wearer's body, a liquid impervious backsheet that faces the wearer's clothing, an absorbent core disposed between the liquid pervious topsheet and the backsheet. Col. 1:21-26.

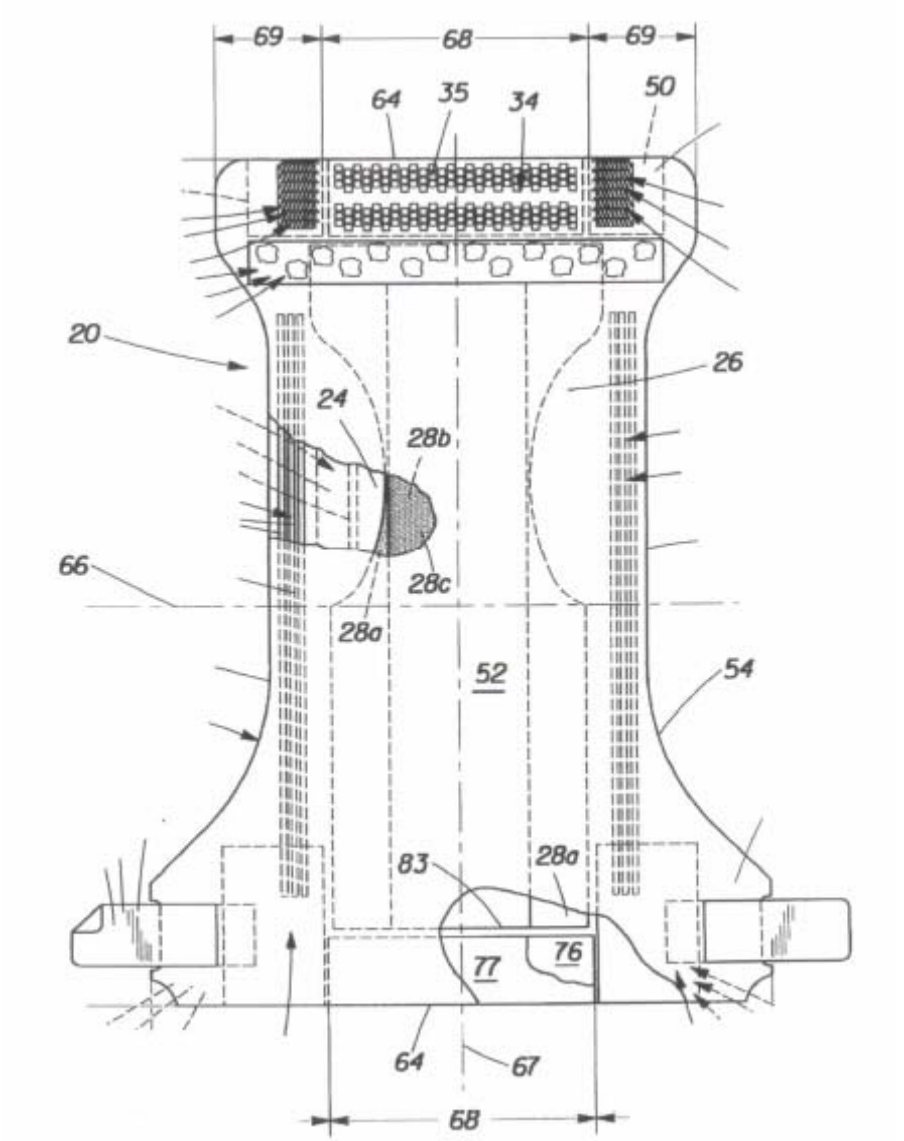

Elder Fig. 1—diaper

With reference to Elder Fig. 1 (from which some drawing element numbers have been deleted), there is shown an absorbent article, in the form of a diaper, having topsheet **24**, backsheet **26** and absorbent core **28**. Col. 6:25-34.

The absorbent core is said to preferably comprise an acquisition layer **28a**, an acquisition/distribution layer **28b**, and a storage core **28c**. Col. 11:32-40.

The article has lotion. According to Elder, it is particularly preferred to apply the lotion in a plurality of spaced apart stripes (*i.e.*, non-uniform coverage) so as to minimize the effect of the lotion on the absorbency properties of a diaper.

The use of stripes in the location noted is said to provide the central region **68** with an open area so as to easily absorb bodily fluids. Col. 29:20-25.

The use of stripes is further described in Example 3. Col. 37:14-18.

Examiner's rejection

The Examiner, after noting the difference between Roe and the claimed subject matter, found that Elder described the use of stripes. Examiner's Answer 4-5.

The Examiner also found that one skilled in the art would have used stripes in the Roe absorbent devices to "allow liquid to still pass through the topsheet." Examiner's Answer 5, first paragraph.

We understand the Examiner to have found that one skilled in the art would have used stripes to simultaneously (1) permit the absorbent core to easily absorb bodily fluids while at the same time (2) providing lotion as needed.

Knowledge of person having ordinary skill in the art

On this record, we have no trouble finding that a person having ordinary skill the art would know at least the following.

1. Diapers and sanitary napkins comprise a topsheet, a backsheet and an absorbent layer between the topsheet and backsheet.

2. Lotions are used in both diapers and sanitary napkins.

3. Stripes are used in diapers to (1) permit the absorbent core to easily absorb bodily fluids while at the same time (2) providing lotion as needed.

4. While diapers differ from sanitary napkins, particularly in the rate in which fluid reaches the diaper vis-à-vis the sanitary napkin, both the diaper and the sanitary napkin function seek to accomplish a common result—absorb bodily fluids.

5. Many features used in diapers are also used in sanitary napkins and vice versa.

Objective evidence of non-obviousness

Apart from attorney argument, P&G has not presented for our consideration any objective evidence of non-obviousness.

E. Principles of law

A claimed invention is not patentable if the subject matter of the claimed invention would have been obvious to a person having ordinary skill in the art. 35 U.S.C. § 103(a); *KSR Int'l Co. v. Teleflex Inc.*, 127 S. Ct. 1727, 82 USPQ2d 1385 (2007); *Graham v. John Deere Co. of Kansas City*, 383 U.S. 1 (1966).

Facts relevant to a determination of obviousness include (1) the scope and content of the prior art, (2) any differences between the claimed invention and the prior art, (3) the level of skill in the art and (4) any relevant objective evidence of obviousness or non-obviousness. *KSR*, 82 USPQ2d at 1389, *Graham*, 383 U.S. at 17-18.

A person having ordinary skill in the art uses known elements and process steps for their intended purpose. *Anderson's-Black Rock, Inc. v. Pavement Salvage Co.*, 396 U.S. 57 (1969) (radiant-heat burner used for its intended purpose in combination with a spreader and a tamper and screed); *Sakraida v. AG Pro, Inc.*, 425 U.S. 273, 282 (1976) (the involved patent simply arranges old elements with each performing the same function it had been known to perform); *Dunbar v. Myers*, 4 Otto (94 U.S.) 187, 195 (1876) (ordinary mechanics know how to use bolts, rivets and screws and it is obvious that any one knowing how to use such devices would know how to arranged a deflecting plate at one side of a circular saw which had such a device properly arranged on the other side).

An inventor must show that the results the inventor says the inventor achieves with the invention are actually obtained with the invention and it is not enough to show results are obtained which differ from those obtained in the prior art—any difference must be shown to be an unexpected difference. *In re Klosak*, 455 F.2d 1077, 1080, 173 USPQ 14, 16 (CCPA 1972). *See also In re Geisler*, 116 F.3d 1465, 1469-70, 43 USPQ2d 1362, 1365 (Fed. Cir. 1997) (party asserting unexpected results has the burden of proving that the results are unexpected).

The showing must be clear and convincing. *McClain v. Ortmayer*, 141 U.S. 419, 429 1891) (conclusive evidence need to show invention performs some new and important function not performed by the prior art); *In re Heyna*, 360 F.2d 222, 228, 149 USPQ 692, 697 (CCPA 1966) (applicant required to submit clear and convincing evidence to support an allegation of unexpected property). *See also In re Passal*, 426 F.2d 409, 412, 165 USPQ 702, 704 (CCPA 1970) and *In re Lohr*, 317 F.2d 388, 392, 137 USPQ 548, 550-51 (1963) (conclusive proof of unexpected results not submitted by applicant).

F. Discussion

The Examiner's rejection is supported by the prior art upon which the Examiner relies.

Both Roe and Elder deal with diapers and sanitary napkins, in addition to other absorbent devices.

The Examiner relied upon Roe to show absorbent devices and that the lotion claimed by P&G is old.

On appeal, P&G does not argue patentability based on the composition of the lotion.

P&G bottoms its non-obviousness case on the proposition that diapers and sanitary napkins are so different that one skilled in the art would not use the stripes disclosed by Elder on the Roe sanitary napkins—or we presume for that matter the Elder sanitary napkins.

However, all the elements in P&G's claimed combination (1) are known, (2) are used by P&G for their known purpose and (3) achieve nothing more than a predictable result.

P&G argues that its own patents do not teach how lotion might be applied in a beneficial manner to sanitary napkins. Appeal Brief 2. P&G goes on to say that Roe is "directed to a baby diaper." *Id*.

It is true that the Roe claims are limited to a diaper. However, the descriptive portion of Roe relates to absorbent articles, one of which is explicitly described as being a sanitary napkin. Col. 4:16. Roe's broad "pre-application" disclosure (or phrased differently—P&G's pre-litigation posture) is difficult to reconcile with P&G's current narrow argument and belies its attempt to limit Roe to diapers. Elder also contradicts the argument made to us on appeal because it claims absorbent articles. Given that Roe and Elder are pre-application P&G documents, we are inclined to credit Roe and Elder vis-à-vis the argument of counsel presented on appeal. *Cf. Velander v. Garner*, 348 F.3d 1359, 1370-71, 68 USPQ2d 1769, 1778 (Fed. Cir. 2003) (it is within the discretion of the trier of fact to give each item of evidence such weight as it feels appropriate and in giving more weight to prior publications than to subsequent conclusory statements by experts, the Board acted well within that discretion).

It is also true that the discussion in Elder concerning stripes is generally made in the context of diapers. Col. 27:48 through col. 29:64. However, P&G acknowledges in the background of its invention that disposable absorbent articles, including diapers and catamenial devices, having lotioned topsheets are known. Specification 1:20-21. We entertain no doubt that one skilled in the art would know that a lotion may be used on a sanitary napkin and would have known how to use a lotion on the sanitary napkin.

P&G maintains that one skilled in the art would learn absolutely nothing about the benefit of lotion on a sanitary napkin from the prior art relied upon by the Examiner. Appeal Brief 2-3. But, one skilled in the art is more like a fox than an ostrich and would be aware of, and not ignore with its head in the sand, its surroundings—in this case all of the disclosure in Roe and Elder. Moreover, the argument is curious given that P&G told us in the background of the invention that catamenial devices with lotion are known. P&G has not favored us with an explanation why the benefits achieved in the prior art differ from those achieved by using lotion on either the Roe or Elder devices.

P&G next amounts an attack on the Examiner's rationale based on the difference in the low viscosity urine in prolonged gushes received by a diaper receives vis-à-vis high viscosity menses received in relatively small amounts in sanitary napkins. *First*, one skilled the art knows the difference between what a diaper needs to absorb vis-à-vis a sanitary napkin and is capable of designing an absorbent layer for each. *Second*, the prior art tells us that lotions can be present in diapers and sanitary napkins. *Third*, one skilled in the art would know how, why and when to use a lotion in both.

P&G resorts to the ubiquitous lack of "motivation" argument. Appeal Brief 3, last paragraph. To the extent that P&G presents an argument that Roe and Elder must supply an explicit motivation to use lotion in a sanitary pad, the argument is foreclosed by *KSR*.

P&G alleges that the claimed invention "provides a benefit for menses handling including an improvement in skin and hair hygiene." Appeal Brief 2, third full paragraph, last sentence. The difficulty with P&G's argument is

that it is not supported by any evidence, let alone clear and convincing evidence, demonstrating that the claimed invention (1) achieves the result alleged or (2) results in a new function not achieved by the catamenial devices of the prior art having lotioned topsheets. Specification 1:20-21.

G. Conclusions of law

P&G has not sustained its burden on appeal of showing that the Examiner erred in rejecting the claims on appeal as being unpatentable under 35 U.S.C. § 103(a) over Roe and Elder.

On the record before us, P&G is not entitled to a patent containing claims 1-20 and 22.

H. Decision

ORDERED that the decision of the Examiner rejecting claims 1-20 and 22 over the prior art is *affirmed*.

FURTHER ORDERED that no time period for taking any subsequent action in connection with this appeal may be extended under 37 C.F.R. § 1.136(a)(1)(iv) (2006).

AFFIRMED

cc (via First Class mail):

THE PROCTER & GAMBLE COMPANY
Intellectual Property Division-West Bldg.
Winton Hill Business Center – Box 412
6250 Center Hill Avenue
Cincinnati, OH 45224