UNITED STATES PATENT AND TRADEMARK OFFICE

BEFORE THE BOARD OF PATENT APPEALS
AND INTERFERENCES

Ex parte KENNETH E. FLICK

Appeal 2007-3184
Application 10/648,931[1]
Technology Center 2600

Decided: February 12, 2008

Before KENNETH W. HAIRSTON, ROBERT E. NAPPI,
and KARL D. EASTHOM, *Administrative Patent Judges*.

EASTHOM, *Administrative Patent Judge*.

DECISION ON APPEAL

---

[1] We note that Appeal Nos. 2007-1535 and 2007-2992 were decided in connection, respectively, with U.S. Patent Applications 10/626,969 and 10/649,267 in which the Inventor and the Real Party in Interest are the same as in the present appeal, and in which similar subject matter is involved. Appeal No. 2002-1784 was decided in connection with the parent application 09/583,333 to 10/648,931 noted above. The issues decided in the first two listed cases are similar to the issues before us in the present appeal.

STATEMENT OF CASE

Appellant appeals under 35 U.S.C. § 134 from final rejections of claims 1, 4-8, 10, 17-20, 22, 23, 26-30 and 32. We have jurisdiction under 35 U.S.C. § 6(b).

We *reverse*.

Appellant discloses vehicle security devices that provide pre-warn features and are compatible with existing vehicle security systems. (Spec.: par. 0008). The vehicle security device includes a data communications bus, an alert indicator, and an alarm controller interfacing with the bus. A pre-warn vehicle security sensor for sensing a threat level lower than a high security threat level inputs a signal to a pre-warn emulator interfacing with the bus which signals the alarm controller to cause the alert indicator to generate an emulated pre-warn indication different from, or the same as, the high level alarm indication (Spec.: par. 0009, 0012-13). The data bus is used to facilitate communications between numerous vehicle devices such as horns, door locks, motors, trunk releases and the like without having to run dedicated wires throughout the vehicle. Appellant admits that his disclosed data bus in a vehicle alarm system is known, and cites prior US Patent 5,719,551, issued to Appellant. (Spec.: par. 0024).

Independent claim 1, representative of claims on appeal, reads as follows:

> 1. A pre-warn vehicle security device for a vehicle comprising a data communications bus extending throughout the vehicle, the data communications bus carrying data and address information thereover, an alert indicator, and an alarm controller interfacing with the data communications bus extending throughout the vehicle and carrying data and address information

and when in an armed mode causing the alert indicator to generate an alarm indication responsive to a high security threat level, the pre-warn vehicle security device comprising:

a pre-warn vehicle security sensor for sensing a security threat level lower than the high security threat level; and

a pre-warn emulator for generating at least one signal on the vehicle data communications bus extending throughout the vehicle and carrying data and address information responsive to said pre-warn vehicle security sensor so that the alarm controller causes the alert indicator to generate an emulated pre-warn indication different from the alarm indication.

The Examiner relies on the following prior art references:

Hwang '697	US 5,084,697	Jan. 28, 1992
Hwang '407	US 5,216,407	Jun. 1, 1993
Nykerk	US 5,315,285	May 24, 1994
Suman	US 5,469,298	Nov. 21, 1995
Issa	US 5,990,786	Nov. 23, 1999
Boreham	US 6,005,478	Dec. 21, 1999

In addition, we rely on the following additional prior art references in a new grounds of rejection under 37 C.F.R. § 41.50(b):

Flick	US 5,719,551	Feb. 17, 1998[2]

Gabriel Leen, *Expanding Automotive Electronic Systems*, IEEE Computer, Vol. 35, Issue 1, 88-93, Jan. 2002, *available at*

[2] The reference is of record, discussed and cited by Appellant (Spec.: par. 0024; Information Disclosure Statement, filed Nov. 21, 2003).

http://wotan.liu.edu/docis/lib/goti/rclis/dbl/ieecom/(2002)35%253A1%253C88%253AEAES%253E/www.cs.umd.edu%252Fclass%252Fspring2002%252Fcmsc818m%252Fdoc%252F0220%252Fexpanding.pdf (last visited Dec. 10, 2007) ("Leen").[3]

Claims 1, 4, 7, 8, 10, 17, 20, 22, 23, 26, 29, 30 and 32 stand rejected under 35 U.S.C. § 103(a) as unpatentable over Hwang '407 in view of Suman or Nykerk, further in view of Boreham. Claims 5, 18, and 27 stand rejected under 35 U.S.C. § 103(a) as unpatentable over Hwang '407 in view of either Suman or Nykerk, and further in view of Boreham and Hwang '697. Claims 6, 19, and 28 stand rejected under 35 U.S.C. § 103(a) as unpatentable over Hwang '407 in view of Suman or Nykerk, and further in view of Boreham and Issa.

Rather than repeat the arguments of Appellant or the Examiner, we refer to the Brief[4] and the Answer for their respective details. In this decision, we have considered only those arguments actually made by Appellant. Arguments which Appellant could have made but did not make in the Briefs have not been considered and are deemed to be waived. *See* 37 C.F.R. § 41.37(c) (1) (vii).

ISSUE

Has the Examiner established a prima facie case that the collective teachings of Hwang '407 with either Suman or Nykerk, and Boreham,

[3] A copy of this reference is provided in the Evidence Appendix of this opinion.
[4] We refer to the Second Supplemental Appeal Brief filed on October 25, 2006.

would have suggested a vehicle data communications bus extending throughout the vehicle and carrying address information?

FINDINGS OF FACT

1. The Specification is directed to vehicle security devices that provide pre-warn features and are compatible with existing vehicle security systems. A pre-warn vehicle security device for a vehicle includes a data communications bus 22, an alert indicator 24, and an alarm controller 25 interfacing with the bus. A pre-warn vehicle security sensor 26 for sensing a threat level lower than a high security threat level signals a pre-warn emulator 27 interfacing with the data communications bus 22 which then signals the alarm controller to cause the alert indicator 24 to generate an emulated pre-warn indication different from, or the same as, the high level alarm indication (Spec.: par. 0009, 0012-13, Fig. 1). The data communications bus 22 is used to facilitate communications between numerous vehicle devices 23 such as horns, door-lock motors, trunk releases and the like without having to run dedicated wires throughout the vehicle (Spec.: par. 0024, Fig. 1).

2. Appellant admits that the disclosed data bus is known, and cites prior US Patent (US 5,719,551) to Flick, the inventor of this application, for further information on and support of Appellant's data bus. (Spec.: par. 0024, Fig. 1). Flick's alarm system is connected to a data bus that extends throughout a vehicle and carries address and data information (Figs. 1, 3; col. 5, ll. 27-61, col. 6, ll. 60 to col. 7, ll. 54).

3. Hwang ‘407 is directed to a pre-alarm system for an anti-theft alarm. When the circuit is activated, a one-shot timer circuit picks up a first activation signal, and if no further activation signals are received within a preset period of time, it sends the main control alarm circuit a signal to cause a siren to give a short chirp sound. If a number of activation signals from the one-shot timer circuit are sent to the main control alarm circuit which is greater than a threshold number, the main control alarm circuit activates to instigate visible and audible signals. (Col. 1, l. 65 – col. 2, l. 14; Fig. 1, elements 102, 103 and 105).

4. Suman discloses a system that produces an image by reflecting it from a display source using a mirror mounted near the roof. Suman’s input 111 and output 116 data buses are part of driver circuit 75. The data buses are respectively connected between the input 100 and output 115 interface circuitry and a microcontroller 77. The driver circuit 75 is mounted on a circuit board 71 in a housing 63 that is attached to the vehicle roof. The data buses are confined within the housing and do not extend throughout the vehicle. (Col. 1, ll. 32-53, col. 4, ll. 52-54, col. 7, ll. 40-56; Figs. 2, 6A and 6B).

5. Nykerk is directed to an alarm system for sensing and vocally warning a person that approaches a protected vehicle. The system is configured such that it issues a preliminary warning before sounding an alarm. To this end, a self-contained alarm system detects the presence of an intruder in a zone of protection. In response to such detection, a preliminary warning vocally informs the user that a protected region has been entered (i.e., a pre-warning signal). The intruder is then given a predetermined time

to move out of the protected area before sounding the alarm. (Col. 3, ll. 49-67; col. 6, l. 48 - col. 7, l. 10; col. 7, ll. 32-63).

6. Nykerk's data bus is part of a control module of the self-contained alarm system. The control module portion of the system can be positioned in a suitable out-of-the-way location such as under the dash or seat or in the trunk area and because the control module is relatively small, the extent of the data bus confined within this control module is limited. The alarm system is connected to a control unit which is, in turn, connected to a wire harness. The wire harness extends substantially the entire length of the vehicle to connect with various components (e.g., headlights, taillights, horn, sensors, etc.). (Col. 1, ll. 19-29; col. 2, l. 64 - col. 3, l. 2; col. 8, ll. 14-17; col. 9, ll. 59-63; col. 11, ll. 11-21 and 53-62; Fig. 4, elements 30, 55, 57, 60 and 64).

7. Boreham discloses a siren unit with a CPU that provides signals that activate an audible siren responsive to trigger signals received on a control input via a serial interface. The control input is connected to a vehicle security control unit that is able to monitor the vehicle, determine when an alarm condition occurs, and issue the appropriate trigger signal. (Col. 2, ll. 41-53; Fig. 1, elements 2, 4, 10, 12).

8. Depending on Boreham's siren unit's configuration, the siren unit is triggered by either: (1) the contents of a control data packet received by the serial interface, or (2) a trigger signal on the control input. If serial interface control is enabled, the CPU must regularly receive (e.g., every second) a 24-bit control packet from the vehicle security control unit to prevent the siren from being activated. A four-bit address field is provided

(Bits 0-3) which enables the vehicle security control unit to address devices other than the siren unit on a single serial data bus. (Col. 4, ll. 28-31; col. 4, l. 55 - col. 5, l. 12; col. 6, ll. 20-23; Figs. 5, 6 and 8).

9. Leen discloses that in-vehicle networks have become more commonplace (p. 88). The replacement of wiring harnesses with controllable networks using serial protocols reduces weight, costs, and fuel consumption, and saves power and space (p. 88-89, Fig. 1). Moreover, Leen notes that one of the first and most enduring automotive control data bus networks, the "controller area network" (CAN), was developed in the mid-1980s (pp. 88-89).

PRINCIPLES OF LAW

In rejecting claims under 35 U.S.C. § 103, it is incumbent upon the Examiner to establish a factual basis to support the legal conclusion of obviousness. *See In re Fine*, 837 F.2d 1071 (Fed. Cir. 1988). In so doing, the Examiner must make the factual determinations set forth in *Graham v. John Deere Co.*, 383 U.S. 1, 17 (1966).

Discussing the question of obviousness of a patent that claims a combination of known elements, *KSR Int'l v. Teleflex, Inc.*, 127 S. Ct. 1727 explains:

> When a work is available in one field of endeavor, design incentives and other market forces can prompt variations of it, either in the same field or a different one. If a person of ordinary skill can implement a predictable variation, §103 likely bars its patentability. For the same reason, if a technique has been used to improve one device, and a person of ordinary skill in the art would recognize that it would improve similar devices in the same way, using the technique is obvious unless

> its actual application is beyond his or her skill. *Sakraida* [*v. AG Pro, Inc.*, 425 U.S. 273] and *Anderson's-Black Rock*[, *Inc. v. Pavement Salvage Co*., 396 U.S. 57] are illustrative—a court must ask whether the improvement is more than the predictable use of prior art elements according to their established functions.

KSR, 127 S. Ct. at 1740. If the claimed subject matter cannot be fairly characterized as involving the simple substitution of one known element for another or the mere application of a known technique to a piece of prior art ready for the improvement, a holding of obviousness can be based on a showing that "there was an apparent reason to combine the known elements in the fashion claimed." *Id*., 127 S. Ct. at 1740-41. Such a showing requires "some articulated reasoning with some rational underpinning to support the legal conclusion of obviousness. . . . [H]owever, the analysis need not seek out precise teachings directed to the specific subject matter of the challenged claim, for a court can take account of the inferences and creative steps that a person of ordinary skill in the art would employ." *Id*., 127 S. Ct. at 1741 (quoting *In re Kahn*, 441 F.3d 977, 987 (Fed. Cir. 2006)).

If the Examiner's burden is met, the burden then shifts to the Appellant to overcome the prima facie case with argument and/or evidence. Obviousness is then determined on the basis of the evidence as a whole and the relative persuasiveness of the arguments. *See In re Oetiker*, 977 F.2d 1443, 1445 (Fed. Cir. 1992).

ANALYSIS

The Examiner determined that Hwang '407 teaches a pre-alarm vehicle security device having each element of claim 1 except for a data communications bus that extends throughout the vehicle and carries data and

address information. Since Hwang does not disclose the claimed bus, the Examiner also determined that Hwang's pre-warn emulator - required by the claim "for generating at least one signal on the vehicle data communications bus" - is not connected to the bus. The Examiner nonetheless found that a bus is a well-known type of communication line in vehicle security systems (Ans. 4).

The Examiner also cited Suman as teaching the "desirability of using data bus 111 for communicating data for indication of vehicle security." (Ans. 4). In addition, the Examiner relied on Nykerk for teaching the "desirability in a vehicle security system of interfacing security alarm sensing data to data bus 64" which, according to the Examiner, extends "'throughout the vehicle'" - since Appellant did not define the term (Ans. 5). The Examiner determined that because the data buses in both Suman and Nykerk communicate with their respective wiring harnesses, the wiring harnesses effectively act as a portion of the bus. (Ans. 5). In addition, the Examiner cited a fourth reference, Boreham, for teaching a bus in a vehicle alarm (Ans. 5-6).

The Examiner then concluded that it would have been obvious to one of ordinary skill in the art at the time of the invention to connect the pre-alarm warning system disclosed by Hwang to a vehicle data bus as suggested by either Suman or Nykerk, and, further, to use addressing over the data bus and allow a bus to extend throughout the vehicle as suggested by Boreham to, among other things, utilize existing vehicle wiring (Ans. 6).

Appellant argues that the data bus in Suman does not extend throughout the vehicle as claimed, but rather is connected to various inputs

and the microcontroller. Appellant emphasizes that the data bus is "internal to the display unit, and does not extend throughout the vehicle" (Br. 17-18). As to Nykerk, Appellant notes that the internal data bus 64 likewise does not extend throughout the vehicle as claimed, but is confined within the control module of the self-contained alarm system. (Br. 19).

Appellant further argues that there is no motivation to selectively discard the hardwired connections of Hwang '407 and replace them with the confined data bus of either Nykerk or Suman (Br. 10-12). The Examiner responds that the skilled artisan would have found it obvious to use a conventional bus connected to a vehicle alarm system as suggested by Suman, Nykerk, or Boreham in conjunction with an alarm system using a prealarm function to, among other things, employ the well-known advantages of data buses, such as bi-directional communication with various components (Ans. 8-9).

We will not sustain the Examiner's rejection primarily because we do not find a convincing line of reasoning as to how the collective teachings disclose a bus throughout the vehicle. Independent claim 1 recites "a pre-warn emulator for generating at least one signal on the vehicle data communications bus extending throughout the vehicle and carrying data and address information." Independent claims 17 and 23 recite similar limitations. Thus the scope of each of the independent claims includes a vehicle data communication bus extending throughout the vehicle.

We agree with Appellant that Suman's and Nykerk's buses are contained within a housing (FF 4) and control module (FF 6), respectively. We also determine that the Examiner has not produced a sufficient reason to

support a prima facie case for extending the bus of Boreham throughout the vehicle where Boreham's teaching is not clear as to the extent of the bus (see FF 8).

We also disagree with the Examiner's position that Nykerk's or Suman's wire harness effectively extends the data bus throughout the vehicle as claimed. A wire harness is a distinct component from a data bus. Although selected data signals can be amplified and buffered by the interface between the bus and the wire harness, and then presented to the wire harness for routing to various devices, the wire harness is not a data bus as the term is understood by skilled artisans (i.e., a data bus that carries data and address information to multiple devices via the same set of wires). Simply put, a wire harness connects various devices using dedicated, point-to-point wiring. A data bus, however, does not require such dedicated wiring since each device can be separately addressed using the same wiring for all devices. In any event, the very labels used by Nykerk to identify the data bus and wiring harness, respectively, further suggest that they are distinct in structure and operation.

Therefore, we will not sustain the Examiner's rejection of independent claims 1, 17 and 23 based on the record before us. We therefore also will not sustain the Examiner's rejection of claims 4, 7, 8, 10, 20, 22, 26, 29, 30 and 32 which depend upon on claims 1, 17 or 23. Since the teachings of either Hwang '697 or Issa do not cure the deficiencies noted above, we likewise will not sustain the Examiner's rejection of dependent claims 6, 15, 18-19, and 27-28.

Though the bus issue addressed above is dispositive of this appeal, we turn next to an argument by Appellant that is relevant to our new grounds of rejection entered below. That is, Appellant argues that the collective teachings do not suggest "a pre-warn emulator that provides at least one signal carrying data and address information for use by such a controller as recited in the above-noted independent claims." (Br. 17) (*emphasis* original). We disagree with Appellant's assertion that the independent claims require Hwang's '407 pre-warn emulator 102 to provide address information. We recognize that Hwang's pre-warm emulator is a one-shot timer that generates data - a variable width pulse - and does not generate address information, as Appellant's argument implies (Br. 16). However, the claims do not require the *pre-warn emulator* to be connected directly to the bus or to provide, *by itself*, address information.

Claim 1 requires: a "pre-warn emulator for *generating at least one signal on the vehicle data communications bus* extending throughout the vehicle *and carrying data and address information responsive to said pre-warn vehicle security sensor so that the alarm controller causes the alert indicator to generate an emulated* [alarm signal]." (emphasis added) Independent claims 17 and 23 recite similar limitations. That is, "carrying data and address information" modifies the bus, since it is parallel to "extending" in the phrase "bus extending…and carrying."

Hwang's '407 pre-warn emulator 102 meets the claim limitation "for generating at least one signal" on Hwang's '407 *outputs lines* which carry data *responsive* to the pre-warn security sensor of the alarm controller 103 - which controller "causes the alert indicator": i.e., the siren circuit 105,

flashing circuit 106, and dome light control circuit 108, "to generate an emulated pre-warn indication different from the alarm indication." (Hwang '407, Fig. 1). That is, the claims require the bus to carry data and address information *responsive* to the pre-warn security sensor. Hwang's '407 motion detector - the pre-warn sensor - inputs a signal to the pre-warn emulator 102 - *causing* the *output lines* to carry data *responsive* to the motion detector via the alarm circuit 103.

Thus, while we do not sustain the Examiner's rejections, we find evidence of unpatentability based upon the collective teachings of Hwang '407 and additional prior art as indicated below. Accordingly, we enter new grounds of rejection under 37 C.F.R. § 41.50(b).

New Grounds of Rejection Under 37 C.F.R. § 41.50(b)

At Least the Independent Claims are Unpatentable Over the Teachings of Hwang '407 In View of Flick or Leen

Claims 1, 17, and 23 are rejected under 35 U.S.C. § 103(a) as unpatentable over Hwang '407 in view of and Leen or Flick.

As the Examiner finds, the claims differ from Hwang '407 only in calling for a data communications bus to extend throughout the vehicle and carry address information (Ans. 3, see also FF 3). Rather than repeat the Examiner's findings, we incorporate them here as our own with supplemental findings that follow. Having addressed Appellant's argument that Hwang '407 does not teach the pre-warn emulator as communicating with a data bus, we have determined, as noted above, that Hwang's '407 pre-

warn emulator communicates with Hwang's '407 output lines in order to send inputs to and control the various alarm indicators.

That is, as outlined above, Hwang's '407 pre-warn emulator 102 is "for generating at least one signal" on Hwang's '407 *outputs lines* which carry data *responsive* to the pre-warn security sensor of the alarm controller 103 - which controller "causes the alert indicator": i.e., the siren circuit 105, flashing circuit 106, and dome light control circuit 108, "to generate an emulated pre-warn indication different from the alarm indication." (Hwang'407, Fig. 1). The claim requires the bus to carry data and address information to be "responsive" to the pre-warn security sensor. Hwang's '407 motion detector - the pre-warn sensor - inputs a signal to the pre-warn emulator 102 - causing the *output lines* to carry data responsive to the motion detector via the alarm circuit 103.

However, substituting prior art bus lines extending throughout the vehicle such as that of Leen or Flick for the various *output lines* of Hwang '407 that extend throughout the vehicle, meet the claim. Myriad reasons to replace the point-to-point output lines with a single bus exist and were well known. For example, replacing wiring harnesses in vehicles with data communication buses reduces weight, costs, and complexity, and saves space and fuel consumption which would have been well known in the vehicle manufacturing industry because, since the early 1980s, centralized and distributed networks have replaced point-to-point wiring according to Leen's teachings (FF9).

Furthermore, Flick, incorporated by reference by Appellant in his Specification, teaches (by Appellant's admission) the details of the disclosed

bus system which Appellant relies upon to support the claim limitation "bus extending throughout the vehicle" (Spec.: par. 0024, FF 2). Flick teaches all of the bus limitations disclosed and claimed by Appellant. (FF 2). Flick also provides reasons for using a data bus in a vehicle alarm system:

> In response to the increased wiring complexity and costs, vehicle manufacturers have begun attempts to reduce the amount of wiring within vehicles to reduce weight, reduce wire routing problems, decrease costs, and reduce complications which may arise when troubleshooting the electrical system. For example, some manufactures have adopted multiplexing schemes to reduce cables to three or four wires and to simplify the exchange of data among the various onboard electronic systems.

(Flick, col. 1, ll. 59-67).

Furthermore, Flick teaches using a pre-warn emulator 26, sensors 22a, 22b, and alarm indicators 31, 37 and connecting same to a bus 62 (Fig. 1, 3). Flick also teaches connecting alarm indicators 64, vehicle sensors 60 and an alarm controller 65 to a bus (Fig. 3).[5] As indicated above, Flick teaches several advantages of connecting a vehicle alarm system to a data bus communicating with devices throughout a vehicle, so that replacing Hwang's '407 wiring would have been obvious in order to reduce complications, weight, and cost, etc.

---

[5] We also determine that Flick teaches every claim limitation except for the explicit disclosure of generating an *emulated pre-warn indication different from the alarm indication*. It appears to us that one of ordinary skill may have understood that Flick's "pre-warn input" 26 would cause a lesser (i.e.., pre-warn) indication to be generated as compared to a full-blown (i.e., alarm) indication, but we leave this determination to the Examiner. Regardless, Hwang '407 explicitly teaches the limitation. Hence, the order of references could have been reversed to meet the claim.

In view of these teachings, the skilled artisan would have had ample reason to replace Hwang's '407 wiring using Flick's or Leen's bus in order to facilitate communication with electrical devices located at the front, sides and rear of the vehicle. Further, in view of the clear trend in the industry for replacing wiring harnesses with data communications buses in vehicles as evidenced above, it would have been obvious to the skilled artisan at the time of the invention to replace Hwang's '407 one-to-one wiring extending throughout the vehicle, with Flick's or Leen's data communications bus carrying data and address information, in order to obtain the predictable result of reduced weight, cost, and complexity while providing communications with and control of various vehicle electrical components including alarm system components.

CONCLUSION

We conclude that the Examiner erred in rejecting claims 1, 4, 7, 8, 10, 17, 20, 22, 23, 26, 29, 30 and 32. Accordingly, we will not sustain the Examiner's rejection of those claims. Since the teachings of either Hwang '697 or Issa do not cure the deficiencies noted above, we likewise will not sustain the Examiner's rejection of claims 6, 15, 18-19, and 27-28.

DECISION

We reverse the Examiner's decision rejecting claims 1, 4-8, 10, 17-20, 22, 23, 26-30 and 32 on appeal. However, we have entered new grounds of rejection under 37 C.F.R. § 41.50(b) for independent claims 1, 17, and 23. Although we decline to reject every claim under our discretionary authority under 37 C.F.R. § 41.50(b), we emphasize that our decision does not mean

the remaining claims are patentable. Rather, we merely leave the patentability determination of these claims to the Examiner. *See* MPEP § 1213.02.

This decision contains a new ground of rejection pursuant to 37 C.F.R. § 41.50(b) (effective September 13, 2004, 69 Fed. Reg. 49960 (August 12, 2004), 1286 Off. Gaz. Pat. Office 21 (September 7, 2004)). 37 C.F.R. § 41.50(b) provides "[a] new ground of rejection pursuant to this paragraph shall not be considered final for judicial review."

37 C.F.R. § 41.50(b) also provides that the Appellant, WITHIN TWO MONTHS FROM THE DATE OF THE DECISION, must exercise one of the following two options with respect to the new ground of rejection to avoid termination of the appeal as to the rejected claims:

> (1) *Reopen prosecution*. Submit an appropriate amendment of the claims so rejected or new evidence relating to the claims so rejected, or both, and have the matter reconsidered by the examiner, in which event the proceeding will be remanded to the examiner. . . .
>
> (2) *Request rehearing*. Request that the proceeding be reheard under § 41.52 by the Board upon the same record. . . .

No time period for taking any subsequent action in connection with this appeal may be extended under 37 C.F.R. § 1.136(a)(1)(iv).

REVERSED
37 C.F.R. § 41.50(b)

KIS

ALLEN, DYER, DOPPELT, MILBRATH & GILCHRIST, P.A.
1401 CITRUS CENTER 255 SOUTH ORANGE AVENUE
P. O. BOX 3791
ORLANDO, FL 32802-3791

Add A Page | Delete Last Page

Notice of References Cited	Application/Control No. 10/648,931	Applicant(s)/Patent Under Reexamination	
	Examiner Brent Swarthout	Art Unit 2600	Page 1 of 1

U.S. PATENT DOCUMENTS

*		Document Number Country Code-Number-Kind Code	Date MM-YYYY	Name	Classification	
	A	US-				
	B	US-				
	C	US-				
	D	US-				
	E	US-				
	F	US-				
	G	US-				
	H	US-				
	I	US-				
	J	US-				
	K	US-				
	L	US-				
	M	US-				

FOREIGN PATENT DOCUMENTS

*		Document Number Country Code-Number-Kind Code	Date MM-YYYY	Country	Name	Classification	
	N						
	O						
	P						
	Q						
	R						
	S						
	T						

NON-PATENT DOCUMENTS

*		Include as applicable: Author, Title Date, Publisher, Edition or Volume, Pertinent Pages)
*	U	Gabriel Leen, "Expanding Automotive Electronic Systems," IEEE Computer, Vol. 35, Issue 1, 88-93, Jan. 2002
	V	
	W	
	X	

*A copy of this reference is not being furnished with this Office action. (See MPEP § 707.05(a).)
Dates in MM-YYYY format are publication dates. Classifications may be US or foreign.

Expanding Automotive Electronic Systems

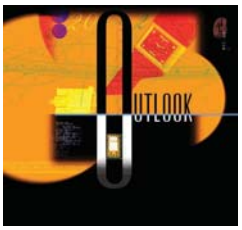

A vast increase in automotive electronic systems, coupled with related demands on power and design, has created an array of new engineering opportunities and challenges.

Gabriel Leen
PEI Technologies

Donal Heffernan
University of Limerick

The past four decades have witnessed an exponential increase in the number and sophistication of electronic systems in vehicles. Today, the cost of electronics in luxury vehicles can amount to more than 23 percent of the total manufacturing cost. Analysts estimate that more than 80 percent of all automotive innovation now stems from electronics. To gain an appreciation of the sea change in the average dollar amount of electronic systems and silicon components—such as transistors, microprocessors, and diodes—in motor vehicles, we need only note that in 1977 the average amount was $110, while in 2001 it had increased to $1,800.[1]

The growth of electronic systems has had implications for vehicle engineering. For example, today's high-end vehicles may have more than 4 kilometers of wiring—compared to 45 meters in vehicles manufactured in 1955. In July 1969, Apollo 11 employed a little more than 150 Kbytes of onboard memory to go to the moon and back. Just 30 years later, a family car might use 500 Kbytes to keep the CD player from skipping tracks.[2]

The resulting demands on power and design have led to innovations in electronic networks for automobiles. Researchers have focused on developing electronic systems that safely and efficiently replace entire mechanical and hydraulic applications, and increasing power demands have prompted the development of 42-V automotive systems.

IN-VEHICLE NETWORKS

Just as LANs connect computers, control networks connect a vehicle's electronic equipment. These networks facilitate the sharing of information and resources among the distributed applications. In the past, wiring was the standard means of connecting one element to another. As electronic content increased, however, the use of more and more discrete wiring hit a technological wall.

Added wiring increased vehicle weight, weakened performance, and made adherence to reliability standards difficult. For an average well-tuned vehicle, every extra 50 kilograms of wiring—or extra 100 watts of power—increases fuel consumption by 0.2 liters for each 100 kilometers traveled. Also, complex wiring harnesses took up large amounts of vehicle volume, limiting expanded functionality. Eventually, the wiring harness became the single most expensive and complicated component in vehicle electrical systems.

Fortunately, today's control and communications networks, based on serial protocols, counter the problems of large amounts of discrete wiring. For example, in a 1998 press release, Motorola reported that replacing wiring harnesses with LANs in the four doors of a BMW reduced the weight by 15 kilograms while enhancing functionality. Beginning in the early 1980s, centralized and then distributed networks have replaced point-to-point wiring.[3]

Figure 1 shows the sheer number of systems and applications contained in a modern automobile's network architecture.

Controller area network

In the mid-1980s, Bosch developed the controller area network, one of the first and most enduring automotive control networks. CAN is currently the most widely used vehicular network, with more than 100 million CAN nodes sold in 2000.

0018-9162/02/$17.00 © 2002 IEEE

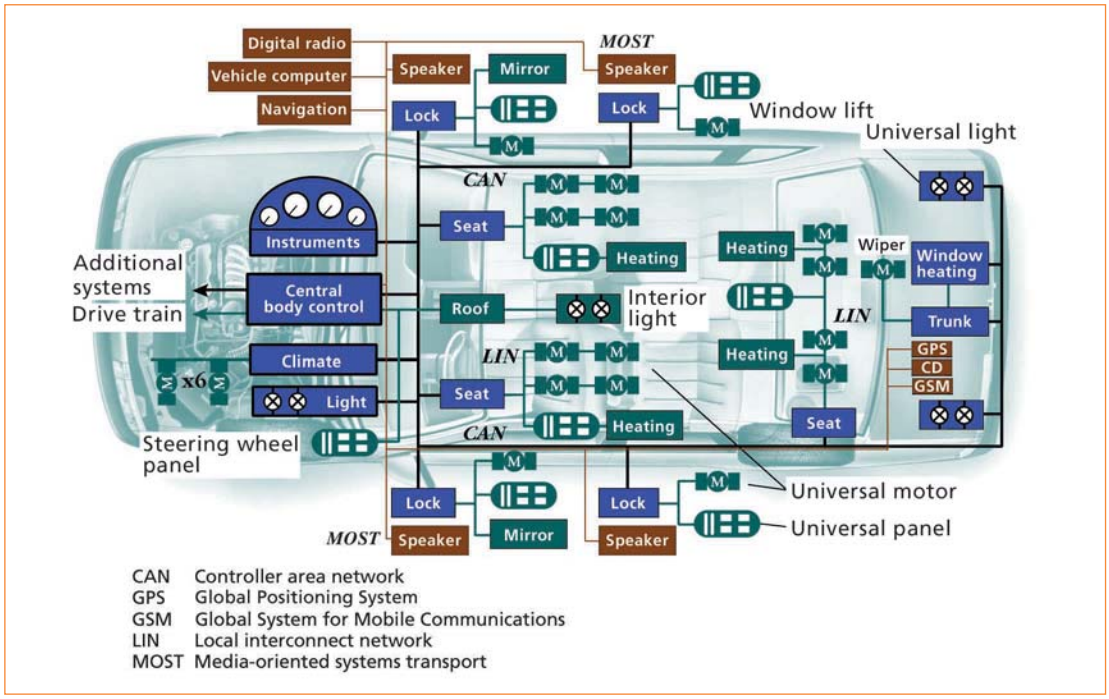

Figure 1. One subset of a modern vehicle's network architecture, showing the trend toward incorporating ever more extensive electronics.

A typical vehicle can contain two or three separate CANs operating at different transmission rates. A low-speed CAN running at less than 125 Kbps usually manages a car's "comfort electronics," like seat and window movement controls and other user interfaces. Generally, control applications that are not real-time critical use this low-speed network segment. Low-speed CANs have an energy-saving sleep mode in which nodes stop their oscillators until a CAN message awakens them. Sleep mode prevents the battery from running down when the ignition is turned off.

A higher-speed CAN runs more real-time-critical functions such as engine management, antilock brakes, and cruise control. Although capable of a maximum baud rate of 1 Mbps, the electromagnetic radiation on twisted-pair cables that results from a CAN's high-speed operation makes providing electromagnetic shielding in excess of 500 Kbps too expensive.

CAN is a robust, cost-effective general control network, but certain niche applications demand more specialized control networks. For example, X-by-wire systems use electronics, rather than mechanical or hydraulic means, to control a system. These systems require highly reliable networks.

Emerging automotive networks

X-by-wire solutions form part of a much bigger trend—an ongoing revolution in vehicle electronics architecture. Multimedia devices in automobiles, such as DVD players, CD players, and digital TV sets, demand networks with extensive synchronous bandwidth. Other applications require wireless networks or other configurations. To accommodate the broad and growing spectrum of vehicle network applications, research engineers are developing many specialized network protocols, including the following.

Domestic Data Bus. Matsushita and Philips jointly developed the Domestic Data Bus (D2B) standard more than 10 years ago, which the Optical Chip Consortium—consisting of C&C Electronics, Becker, and others—has promoted since 1992. D2B was designed for audio-video communications, computer peripherals, and automotive media applications. The Mercedes-Benz S-class vehicle uses the D2B optical bus to network the car radio, autopilot and CD systems, the Tele-Aid connection, cellular phone, and Linguatronic voice-recognition application.

Bluetooth. Bluetooth is an open specification for an inexpensive, short-range (10–100 meters), low-power, miniature radio network. The protocol provides easy and instantaneous connections between Bluetooth-enabled devices without the need for cables. Potential vehicular uses for Bluetooth include hands-free phone sets; portable DVD, CD, and MP3 drives; diagnostic equipment; and handheld computers.

Mobile media link. Designed to support automotive multimedia applications, the mobile media link network protocol facilitates the exchange of data and control information between audio-video equipment, amplifiers, and display devices for such things as game consoles and driver navigation maps. Delphi Packard Electric Systems developed the MML protocol based on a plastic fiber-optic physical layer. Delphi has installed the system in the Network Vehicle, an advanced concept vehicle developed in conjunction with IBM, Sun Microsystems, and Netscape.

Today's vehicle networks are transforming automotive components into truly distributed electronic systems.

Media-oriented systems transport. The applications of MOST, a fiber-optic network protocol with capacity for high-volume streaming, include automotive multimedia and personal computer networking. More than 50 firms—including Audi, BMW, DaimlerChrysler, Becker Automotive, and Oasis SiliconSystems—developed the protocol under the MOST Cooperative (http://www.mostnet.de/main/index.html).

Time-triggered protocol. Designed for real-time distributed systems that are hard and fault tolerant, the time-triggered protocol ensures that there is no single point of failure. The protocol has been proposed for systems that replace mechanical and hydraulic braking and steering subsystems. TTP is an offshoot of the European Union's Brite-Euram X-by-wire project.

Local interconnect network. A master-slave, time-triggered protocol, the local interconnect network is used in on-off devices such as car seats, door locks, sunroofs, rain sensors, and door mirrors. As a low-speed, single-wire, enhanced ISO-9141-standard network, LIN is meant to link to relatively higher-speed networks like CAN. LIN calms fears about security of serial networks in cars. Because LIN provides a master-slave protocol, a would-be thief cannot tap into the network's vulnerable points, such as the door mirrors, to deactivate a car alarm system. Audi, BMW, DaimlerChrysler, Motorola, Volcano, Volvo, and Volkswagen created this inexpensive open standard.

Byteflight. A flexible time-division multiple-access (TDMA) protocol for safety-related applications, Byteflight can be used with devices such as air bags and seat-belt tensioners. Because of its flexibility, Byteflight can also be used for body and convenience functions, such as central locking, seat motion control, and power windows. BMW, ELMOS, Infineon, Motorola, and Tyco EC collaborated in its development. Although not specifically designed for X-by-wire applications, Byteflight is a very high performance network with many of the features necessary for X-by-wire.

FlexRay. FlexRay is a fault-tolerant protocol designed for high-data-rate, advanced-control applications, such as X-by-wire systems. The protocol specification, now nearing completion, promises time-triggered communications, a synchronized global time base, and real-time data transmission with bounded message latency. Proposed applications include chassis control, X-by-wire implementations, and body and powertrain systems. BMW, DaimlerChrysler, Philips, and Motorola are collaborating on FlexRay and its supporting infrastructure. FlexRay will be compatible with Byteflight.

Time-triggered CAN. As an extension of the CAN protocol, time-triggered CAN has a session layer on top of the existing data link and physical layers. The protocol implements a hybrid, time-triggered, TDMA schedule, which also accommodates event-triggered communications. The ISO task force responsible for the development of TTCAN, which includes many of the major automotive and semiconductor manufacturers, developed the protocol. TTCAN's intended uses include engine management systems and transmission and chassis controls with scope for X-by-wire applications.

Intelligent transportation systems data bus. Enabling plug-and-play in off-the-shelf automotive electronics, the intelligent transportation systems data bus eliminates the need to redesign products for different makes. The Automotive Multimedia Interface Collaboration, a worldwide organization of motor vehicle makers, created the specification, which supports high-bandwidth devices such as digital radios, digital videos, car phones, car PCs, and navigation systems. The specification's first release endorses IDB-C (CAN) as a low-speed network and optional audio bus, and two high-speed networks, MOST and IDB-1394b. IDB-1394b is based on the IEEE 1394 FireWire standard.

X-BY-WIRE SOLUTIONS

Today's vehicle networks are not just collections of discrete, point-to-point signal cables. They are transforming automotive components, once the domain of mechanical or hydraulic systems, into truly distributed electronic systems. Automotive engineers set up the older, mechanical systems at a single, fixed operating point for the vehicle's lifetime. X-by-wire systems, in contrast, feature dynamic interaction among system elements.

Replacing rigid mechanical components with dynamically configurable electronic elements triggers an almost organic, systemwide level of integration. As a result, the cost of advanced systems should plummet. Sophisticated features such as chassis control and smart sensors, now confined to luxury vehicles, will likely become mainstream. Figure 2 shows how dynamic driving-control systems have been steadily adopted since the 1920s, with more on the way.[4,5]

Highly reliable and fault-tolerant electronic control systems, X-by-wire systems do not depend on conventional mechanical or hydraulic mechanisms. They make vehicles lighter, cheaper, safer, and more

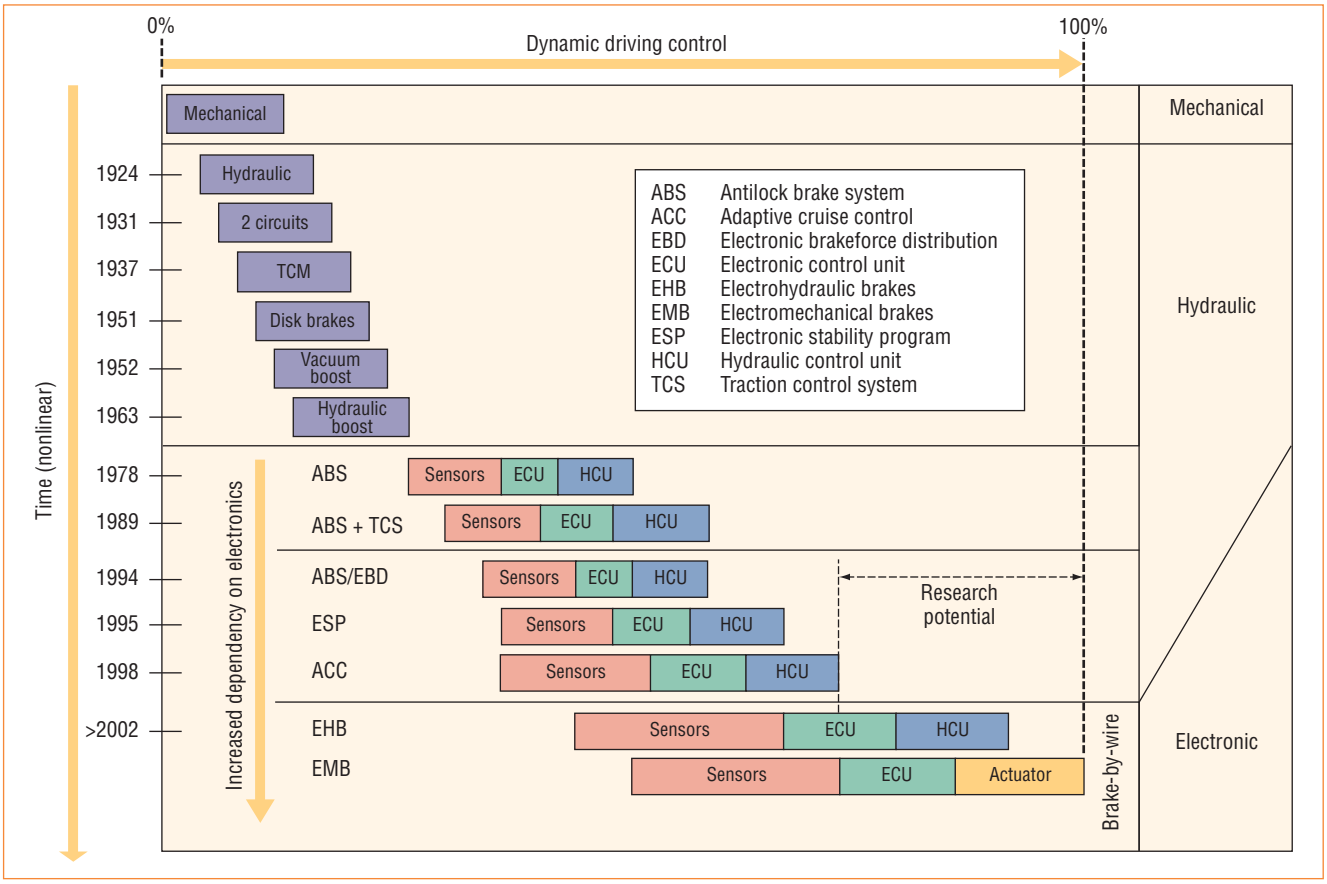

Figure 2. Past and projected progress in dynamic driving control systems. As the cost of advanced systems plummets, sophisticated features are likely to become mainstream components.

fuel-efficient. These self-diagnosing and configurable systems adapt easily to different vehicle platforms and produce no environmentally harmful fluids. Such systems can eliminate belt drives, hydraulic brakes, pumps, and even steering columns.

Indeed, by 2010 one in three new cars will feature electronic steering. X-by-wire steering systems under development will replace the steering column shaft with angle sensors and feedback motors. A wire network will supply the control link to the wheel-mounted steering actuator motors. Removal of the steering column will improve driver safety in collisions and allow new styling freedom. It will also simplify production of left- and right-hand models.

It is natural to add advanced functions to such electronic systems. For example, consider systems that reduce steering-wheel feedback to the driver. In mechanical steering systems, the driver actually feels the vehicle losing control in unstable conditions and can react appropriately. Today, such electronic features as antilock braking may let the vehicle approach or surpass this control-loss edge without providing warning. To accommodate this, X-by-wire systems can include motors on the steering wheel that provide artificial feedback to the driver.

All major automakers are developing prototype or production X-by-wire systems. TRW's electronic power-assisted steering system improves fuel economy by up to 5 percent. Delphi Automotive Systems claims similar improvements from its E-Steer system. Companies such as Bosch, Continental AG, Visteon, Valeo, and most other original equipment manufacturers have either developed or plan to develop X-by-wire technologies and components.

Several protocols are suitable for X-by-wire applications. TTP, for example, is a promising and available protocol geared toward improving driving safety. However, the FlexRay and TTCAN protocols will start to compete with TTP when manufacturers look for more flexibility and lower cost.

Figure 3 shows the past and potential future improvements from active and passive safety systems such as air bags and road-recognition sensors.[6] Advanced electronic systems and the X-by-wire infrastructure will enable most potential active safety improvements.

ELECTRICAL POWER DEMAND

Vehicular battery management systems continuously check the condition of the car's battery, monitoring the charge to ensure the auto will start and have enough power to maintain critical systems. Even with the engine switched off, some systems—real-time clocks, keyless entry and security devices, and vehicle control interfaces such as window switches and light switches—still consume power.

In addition to these conventional electrical systems, emerging applications as diverse as in-car computers and GPS navigation systems consume enough power to raise the total energy load to more than

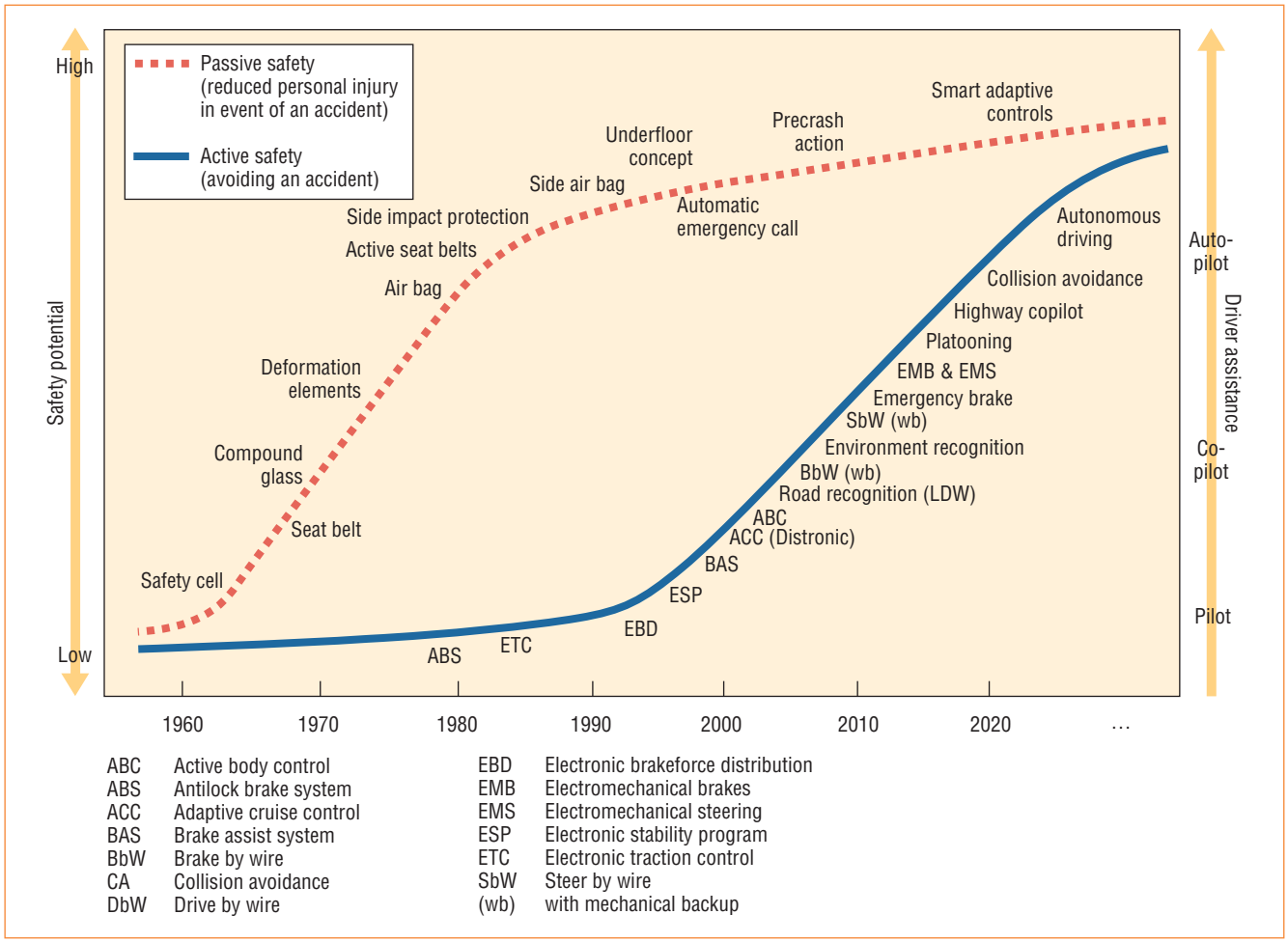

Figure 3. Past and future active and passive safety systems. Advanced electronic systems and the X-by-wire infrastructure will enable active safety improvements.

2 kW. If historical trends continue, internal power demand will grow at a rate of 4 percent a year. Conservative estimates put the average electrical power requirements for high-end vehicles at 2.5 kW by 2005.[7] These increases place strains on conventional power equipment. For example, at a 3-kW load, bracket-mounted, belt-driven alternators generate unpleasant noises and require liquid cooling.

Table 1 shows some anticipated electrical loads for key emerging systems.[8] Analysts expect the loads to reach the listed levels by 2005. Electromechanical valves that will replace the camshaft and inlet and exhaust valves offer one exception—they probably won't be produced until 2010.

Given the benefits they offer, such systems and their greater power loads are necessary. Electromechanical valves, for example, should provide a 15 percent improvement in fuel consumption. Preheated catalytic converters will decrease exhaust emissions by 60 to 80 percent.

THE 42-V SOLUTION

To meet the increasing demand for power, a beltless engine with an integrated alternator-starter on the flywheel operating at a 42-V potential offers the most promising proposed solution. The motive for the new 42-V system is clear: 79 percent of the energy entering a conventional engine does not make it to the driveline.[2] The standard Lundell claw-and-rotor alternator is itself only 30 percent efficient at high speeds and 70 percent efficient at low speeds. Thus, generating a watt of electrical power requires about 2 watts of mechanical power, with the lost watt turned into heat.

The integrated system is expected to be 20 percent more efficient, providing a benefit of roughly 0.2 km/liter, or 0.4 mpg. Its "lite hybrid" alternator-starter will operate the vehicle in start-and-stop mode, in which the engine can be restarted in 200 ms for even more fuel savings. In addition, removal of the front-end accessory drive—running the alternator and power-steering pump—will mean enhanced car styling. The new 42-V systems are expected in new autos by 2003.

Within the electrical system, boosting the voltage proportionally reduces the required current for a given delivered power. Smaller currents will use smaller and lighter-gauge cables, allowing an expected 20 percent reduction in cable bundle size. Further, the carrying capacity of semiconductor switches for electrical currents relates directly to silicon area size, while operational voltage levels are a function of device thickness and doping profile. With less silicon area required, these systems

will achieve a significant cost reduction in solid-state load-switching devices.[1]

The 42-V systems will require a 36-V battery and produce a maximum operating level of 50 V, with a maximum dynamic overvoltage of 58 V. Engineers regard a 60-V limit as the safe maximum for cars; greater voltages can generate shocks.[9]

Despite the obvious advantages of 42-V systems, challenges loom. Transition costs—reengineering of products and production processes—will be extremely high due to the legacy of a half century of 12-V systems. The upgrading of service and maintenance equipment will provide other obstacles. Still, annual power consumption increases of 4 percent will simply overload present-day 14-V systems, making 42-V alternatives inevitable.

Reducing wiring mass through in-vehicle networks will bring an explosion of new functionality and innovation. Our vehicles will become more like PCs, creating the potential for a host of plug-and-play devices. With over 50 million new vehicles a year, this offers the potential for vast growth in automotive application software—much like that of the PC industry over the past decade.

On average, US commuters spend 9 percent of their day in an automobile. Introducing multimedia and telematics to vehicles will increase productivity and provide entertainment for millions. Further, X-by-wire solutions will make computer diagnostics a standard part of mechanics' work. The future could even bring the introduction of an electronic chauffeur. ■

Table 1. Predicted electrical loads of advanced electronic systems.

System	Peak load	Average load
Electromechanical valves	2,400	800
Water pump	300	300
Engine cooling fan	800	300
Power steering (all electric)	1,000	100
Heated windshield	2,500	200
Preheated catalytic converter	3,000	60
Active suspension	12,000	360
Onboard computing, navigation		100
Total average		**2,220**

Acknowledgments

We thank the Byteflight Group, DaimlerChrysler, Delphi Automotive, the FlexRay Group, Siemens, Motorola, PEI Technologies, TTTech, and the University of Limerick for their assistance.

References

1. J.M. Miller et al., "Making the Case for a Next-Generation Automotive Electrical System," MIT/Industry Consortium on Advanced Automotive Electrical/Electronic Components and Systems, http://auto.mit.edu/ consortium (current Dec. 2001).
2. W. Powers, "Environmental Challenges, Consumer Opportunities," Auto.com, http://www.auto.com/travcity99/wpowers_aug5.htm (current Dec. 2001).
3. G. Leen, D. Heffernan, and A. Dunne, "Digital Networks in the Automotive Vehicle," *IEE Computer and Control Eng. J.*, Dec. 1999, pp. 257-266.
4. "Electronic Brake Management," *ALex Current Factbook*, BMW Research and Development, http://www.bmwgroup.com/e/index2.shtml?s50&0_0_www_bmwgroup_com/4_news/4_4_aktuelles_lexikon/4_4_aktuelles_lexikon.shtml (current Dec. 2001).
5. A. van Zanten et al., *ESP Electronic Stability Program*, Robert Bosch GmbH, Stuttgart, Germany, 1999.
6. T. Thurner et al., *X-By-Wire: Safety Related Fault-Tolerant Systems in Vehicles*, Document No. XBy-Wire-DB-6/6-25, X-by-Wire Consortium, Stuttgart, Germany, 1998.
7. J.M. Miller, "Multiple Voltage Electrical Power Distribution Systems for Automotive Applications," *Proc. 31st Intersociety Energy Conversion Conf.*, IEEE Press, Piscataway, N.J., 1996, pp. 1930-1937.
8. J.G. Kassakian, "Automotive Electrical Systems: The Power Electronics Market of the Future," *Proc. Applied Power Electronics Conf. and Exposition* (APEC 2000), IEEE Press, Piscataway, N.J., 2000, pp. 3-9.
9. Institute of the Motor Industry, "Volting Ahead on Power Systems," http://www.just-auto.com/features_detail.asp?art=307 (current Dec. 2001).

Gabriel Leen *is a technical researcher at PEI Technologies, University of Limerick, Ireland. His research interests include in-vehicle networks, formal verification of vehicle network protocols, and automotive computing. Leen has several years' experience in automotive electronic system design. He received a research MEng from the University of Limerick and is currently completing a PhD in automotive networking design. Leen is a member of the Institution of Engineers of Ireland. Contact him at gabriel.leen@ul.ie.*

Donal Heffernan *is a lecturer in computer engineering at the University of Limerick, Ireland. His research interests are real-time embedded system design and reliable protocols for distributed control networks. He received an MS in electrical engineering from the University of Salford, UK. Heffernan is a member of the Institution of Engineers of Ireland. Contact him at donal.heffernan@ ul.ie.*