UNITED STATES PATENT AND TRADEMARK OFFICE

BEFORE THE BOARD OF PATENT APPEALS
AND INTERFERENCES

Ex parte JACK W. ADOLINE and THOMAS J. FISCHER

Appeal 2007-3861
Application 10/838,739
Technology Center 3600

Decided: December 17, 2007

Before: JENNIFER D. BAHR, ANTON W. FETTING and
STEVEN D.A. McCARTHY, *Administrative Patent Judges*.

McCARTHY, *Administrative Patent Judge*.

DECISION ON APPEAL

1 STATEMENT OF THE CASE

2 The Appellants appeal under 35 U.S.C. § 134 (2002) from the final
3 rejection of claims 35-47. We have jurisdiction under 35 U.S.C. § 6(b)
4 (2002).

The Appellants' invention relates to a compression spring rod designed to supply a consistent force over an extended number of cycles. Claim 35 is representative of the Appellants' claims and reads as follows:

> 35. A compression spring rod comprising a housing having an axis and axially opposite ends, first and second rods coaxial with said axis and having an inner end in said housing and an outer end axially outwardly of a different one of said opposite ends, a guide member positioned on at least one of said rods and supporting said rods in said housing, said guide member and said rods designed to reciprocate axially in said housing between retracted and extended positions relative thereto, first and second compression springs each extending between said guide member and one of said opposite ends of said housing coaxial with said axis, third and fourth compression springs each extending between said guide member and the other of said opposite ends of said housing coaxial with said axis, said compression springs biasing said guide member toward a central position thereof relative to said housing when said compression spring rod is in a natural state, said outer ends of said rods including a connection arrangement.

Claims 35-47 stand rejected under 35 U.S.C. § 103(a) as being unpatentable over Karbowniczek (U.S. Patent 3,131,921) in light of Johnston (U.S. Patent 5,360,123).

We affirm.

ISSUE

The issue in this appeal is whether the Appellants have shown that the Examiner erred in rejecting claims 35-47 under 35 U.S.C. § 103(a). In addressing this issue, we consider:

(1) whether improving the shock absorber of Karbowniczek by means of nested compression springs as taught by Johnston would have been obvious to one of ordinary skill in the art;

(2) whether improving the shock absorber of Karbowniczek by means of nested compression spring having different winding directions would have been obvious to one of ordinary skill in the art; and

(3) whether improving the shock absorber of Karbowniczek by means of nested compression springs having different wire diameters would have been obvious to one of ordinary skill in the art.

FINDINGS OF FACT

The record supports the following findings of fact ("FF") by a preponderance of the evidence.

1. Karbowniczek teaches a double-acting shock absorber. (Karbowniczek, col. 1, ll. 12-33). The double-acting shock absorber is illustrated in Karbownicek's Figure 1, which is reproduced below.

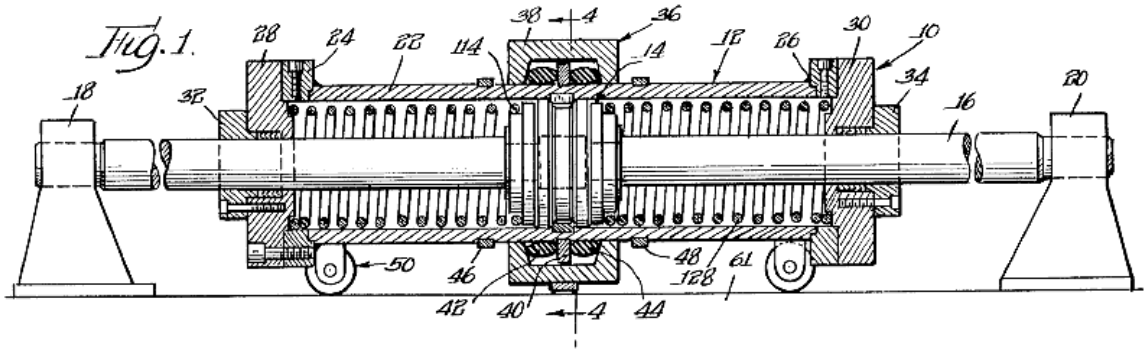

2. Figure 1 is a side sectional view of Karbowniczek's shock absorber. The shock absorber includes a cylinder *12* assembled from a tube *22* and a pair of tube heads *28* and *30* which cover the axially opposite ends of the tube. A pair of glands *32* and *34* mounted on the tube heads restrain the cylinder to axial movement along a piston rod *16*. Pedestals *18* and *20* rigidly support outer ends of the piston rod outside the cylinder. (Karbowniczek, col. 1, l. 60 – col. 2, l. 2 and Fig. 1).

3. Karbowniczek's shock absorber also includes a piston *14* connected to a central portion of the piston rod. (Karbowniczek, col. 1, ll. 63–68). The piston includes a vent ring and a pair of piston heads (not shown in Fig. 1) which abut along conical sealing surfaces. (Karbowniczek, col. 2, ll. 40-41; col. 3, ll. 5-10 and col. 3, ll. 19-24). The piston heads include valves which act to control fluid flow across the piston. (Karbowniczek, col. 2, ll. 41-53 and col. 3, l. 52 – col. 4, l. 35).

4. Karbowniczek's shock absorber also includes compression springs *114* and *128*. Each spring is trapped between one of the tube heads and an adjacent spring recess in one of the piston heads. Since the outer ends of the piston rod are held in a fixed position by the pedestals, the compression springs urge the cylinder toward a null position in which a stop ring located at the center of the tube contacts both piston heads. (Karbowniczek, col. 2, ll. 32-39 and col. 3, ll. 5-31). From the perspective of the cylinder, the compression springs bias the piston toward a position which is central relative to the cylinder.

5. When an axial force is applied to the split load ring *38* of Karbowniczek's shock absorber, the split load ring tends to pull the cylinder *12* along the rod *16* toward a displaced position. (Karbowniczek, col. 7, ll.

37-44). One such displaced position is illustrated in Karbowniczek's Fig. 2, which is reproduced below:

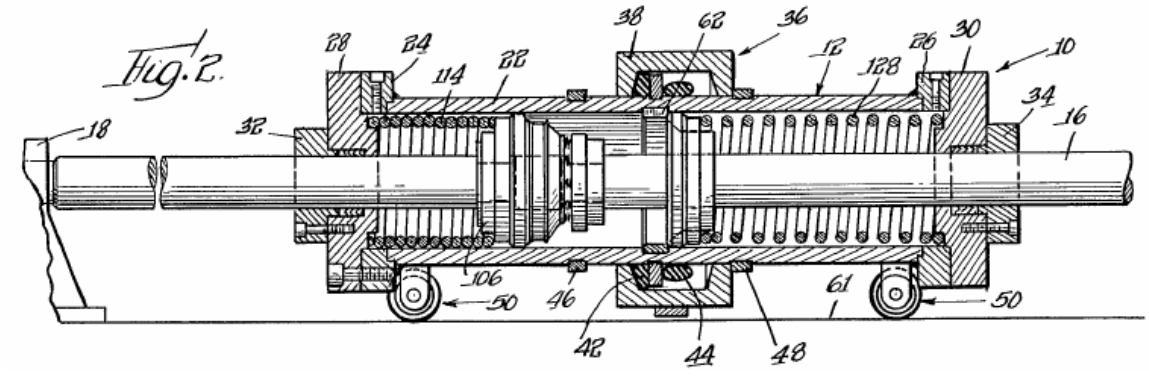

6. Figure 2 is a side sectional view of Karbowniczek's shock absorber. This drawing figure illustrates the position of the cylinder *12* after an axial force (that is, a force directed horizontally toward the right in the plane of Fig. 2) sufficient to fully compress the compression spring *114* is applied to the split load ring *38*. (Karbowniczek, col. 7, ll. 33-37). A comparison of Figs. 1 and 2 suggests that the left side of the rod *16* extends outside the cylinder to a greater degree after the cylinder is displaced to the left relative to the rod, as shown in Fig. 2, than when the cylinder is in the null position, as shown in Fig. 1. Conversely, the left side of the rod is retracted into the cylinder to a greater degree when the cylinder is in the null position than when the cylinder is displaced to the left. The vent ring presses the piston head *106* against the compression spring *114* so that the vent ring and the piston head reciprocate with the rod relative to the cylinder whenever the cylinder moves between the null and displaced positions illustrated in Figs. 1 and 2. (*see* Karbowniczek, col. 7, l. 50 - col. 4, l. 11 and Figs. 1-2).

7. Johnston teaches a stabilizer bar assembly for supporting an end of a horizontal beam above a vertical boom of a gantry. The stabilizer bar assembly is illustrated in Johnston's Figure 18, which is reproduced below.

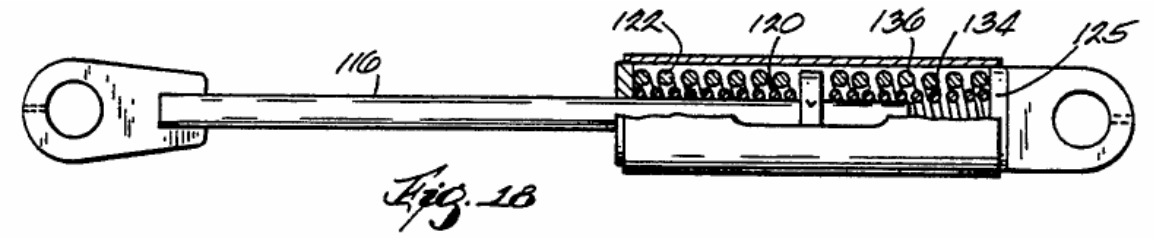

8. Figure 18 is a side elevational view of Johnston's stabilizer bar assembly. The stabilizer includes a shaft *116* partially contained within a barrel. (Johnston, col. 6, ll. 10-14). In Fig. 18, the barrel is partially broken away to show the shaft as well as compression springs *120*, *122*, *134* and *136* encircling portions of the shaft. Clevises coupled to an outer end of the shaft and an exposed side of the upper end plate of the barrel couple the stabilizer bar assembly to the boom and the beam, respectively, of the gantry. (Johnston, col. 6, ll. 40-44 and ll. 65-67).

9. Johnston's compression springs *120* and *122* act against the compression springs *134* and *136* to bias a steel plate welded to the shaft toward a normal position defining an unstressed length of the stabilizer bar assembly. (*Compare* Johnston, col. 7, ll. 20-28 *with id.*, col. 7, l. 50 – col. 8, l. 2). Johnston teaches that the springs *120* and *122* which bias the shaft toward a retracted position may have different lengths so as to provide a two-step progressive resistance. (Johnston, col. 7, ll. 48-60). The use of dual compression springs biasing the shaft against deflection in either direction from the normal position allows slight misalignments of the beam and the boom while preventing large misalignments which could result in structural instability. (*See* Johnston, col. 1, ll. 58-63).

10. Johnston's Figure 16 is reproduced below:

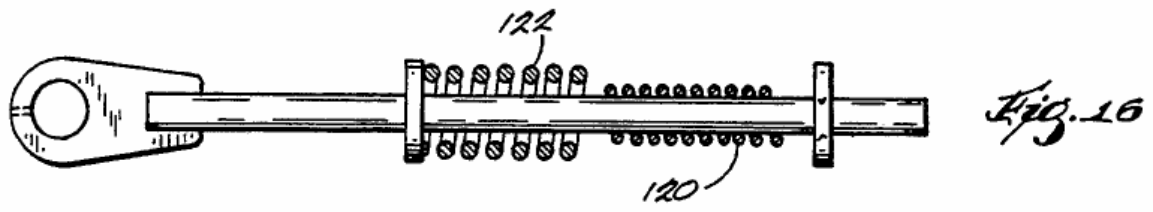

Fig. 16 is a side elevational view showing the compression springs *120* and *122* encircling the shaft prior to the completion of the assembly. (Johnston, col. 2, ll. 64-66). A visual inspection of Fig. 16 would suggest to one of ordinary skill in the art that the springs *120* and *122* have different wire diameters and winding directions. [1]

PRINCIPLES OF LAW

A claim is unpatentable for obviousness under 35 U.S.C. § 103(a) if "the differences between the subject matter sought to be patented and the prior art are such that the subject matter as a whole would have been obvious at the time the invention was made to a person having ordinary skill in the art to which said subject matter pertains." In *Graham v. John Deere Co.*,

[1] The Appellants point out that patent drawings typically are not drawn to scale and that measurements taken from patent drawings generally are unreliable. *Hockerson-Halberstadt, Inc. v. Avia Group Int'l*, 222 F.3d 951, 956 (Fed. Cir. 2000); *In re Wright*, 569 F.2d 1124, (C.C.P.A. 1977); and *In re Olson*, 212 F.2d 590, 592-93 (C.C.P.A. 1954). On the other hand, patent drawings are available as references for all that they would suggest to one skilled in the art. *In re Bager*, 47 F.2d 951, 953 (C.C.P.A. 1931). The observations of the second sentence of Finding of Fact 8 are legitimate because the differences in the wire diameters and the winding directions of the nested compression springs *120* and *122* as shown in Johnston's Fig. 16 are sufficiently clear to the naked eye without the aid of measurements that one skilled in the art would likely interpret the differences to be meaningful in terms of the overall disclosure of the reference.

383 U.S. 1 (1966), the Supreme Court listed three factual inquiries to be made in determining whether claimed subject matter would have been obvious:

> Under § 103, the scope and content of the prior art are to be determined; differences between the prior art and the claims at issue are to be ascertained; and the level of ordinary skill in the pertinent art resolved. Against this background the obviousness or nonobviousness of the subject matter is determined.

Id., 383 U.S. at 17.

ANALYSIS

The Appellants' Brief addresses independent claims 35 and 42 together. Therefore, the Board will decide the patentability of claims 35, 37, 38, 40-42, 44, 45 and 47 as a group, independent claim 35 being deemed representative of the group. The Appellants' Brief separately addresses dependent claims 36 and 43 as a group and dependent claims 39 and 46 as a group. Therefore, the Board will decide the patentability of claims 36 and 43 as a group; and claims 39 and 46 as a group. 37 C.F.R. § 41.37(c)(vii) (2007); *In re Dillon*, 919 F.2d 688, 692 (Fed. Cir. 1990) (*en banc*).

A. The Subject Matter of Claims 35, 37, 38, 40-42, 44, 45 and 47 Would Have Been Obvious From Karbowniczek in Light of Johnston

The first step in determining whether the Examiner has proven obviousness is to determine the scope and content of the prior art. Karbowniczek teaches a double-acting shock absorber including a housing (the cylinder *12* shown in Fig. 1, reproduced above) having an axis and axially opposite ends represented by the tube heads *28* and *30*. The shock

absorber also includes first and second rods coaxial with the axis of the housing.[2] The rods have inner ends both corresponding to the central portion of the piston rod *16* in the housing and outer ends supported by the pedestals *18* and *20* axially outwardly of the opposite ends of the housing. (FF 2). The outer ends of the rods appear in Fig. 1 to include a connection arrangement, that is, necks at the outer ends of the piston rod held by the pedestals *18* and *20*.

The Examiner contends that Karbowniczek's piston *14* is a "guide member" as that term is used in claim 35. (Ans. 3). The Appellants argue that Karbowniczek's piston *14* is not a guide member as recited in claim 35 because the piston heads *106* and *120* "are not free to move between an extended and retracted position of the rods." (Br. 11). More specifically, the Appellants appear to argue that the piston *14* is not a guide member because neither piston head individually reciprocates through the full range of motion of the piston rod.

The combination of the vent ring *64* and either of Karbowniczek's piston heads *106* and *120* serves as a guide member because the combinations are each positioned on the piston rod *16* and each supports the piston rod in the housing. "During examination, 'claims . . . are to be given their broadest reasonable interpretation consistent with the specification, and . . . claim language should be read in light of the specification as it would be interpreted by one of ordinary skill in the art.'" *In re American Acad. Of Science Tech Ctr.*, 367 F.3d 1359, 1364 (Fed. Cir. 2004) (quoting *In re*

---

[2] Karbowniczek discloses a single piston rod *16*. The Appellants have not argued that the disclosure of a single piston rod *16* rather than two rigidly fastened rods constitutes a patentable difference between the teachings of the art of record and the subject matter of claim 39.

Bond, 910 F.2d 831, 833 (Fed. Cir. 1990)). Given their broadest reasonable interpretations, the "retracted and extended positions" recited in claim 35 need not be fully extended and fully retracted positions. The specification, in particular, supports this construction because it uses the phrases "full extension" or "fully extended" rather than the words "extension" or "extended" alone when referring to the furthest extent of the motion of a rod. (e.g., Specification 6, ll. 16-20).

When Karbowniczek's cylinder *12* is fully displaced relative to the rod *16*, as suggested in Fig. 2 of Karbowniczek, the "piston rod" defined by the side of the rod *16* opposite the direction in which the cylinder is displaced appears to extend outside the "housing" (that is, the cylinder) to a greater degree than when the cylinder is in the null position, as in Fig. 1 of Karbowniczek. (FF 5-6). In the language of claim 35, the "piston rod" is in an "extended position" relative to the "housing" (that is, the cylinder) when the cylinder is fully displaced as suggested in Fig. 2. The "piston rod" is in a "retracted position" relative to the "housing" when the cylinder is in the null position shown in Fig. 1. Since the vent ring along with one of the piston heads *106*, *120* reciprocates with the rod *16* relative to the cylinder whenever the cylinder moves between its null position and one of its fully displaced positions (FF 6), the combination of the vent ring with either one of the piston heads is a "guide member" which "reciprocate[s] axially . . . between retracted and extended position relative" to the "housing."

Karbowniczek further teaches that the shock absorber includes two compression springs (*114* and *128* in Fig. 1). Each of the two compression springs extends between the guide member (the piston *14*) and one of the opposite ends of the housing, that is, one of the tube heads *24* and *26*,

coaxially with the axis of the housing. The springs bias the guide member toward a central position relative to the housing when the shock absorber is in the null state. (FF 4).

Johnston teaches a stabilizer bar assembly including a rod (the shaft *116* of Figs. 16 and 18, reproduced above) partially contained in a housing (the barrel shown in Fig. 18). (FF 8). A guide member (the steel plate shown in Figs. 16 and 18) is welded to the rod near the rod's inner end. First and second compression springs *120* and *122* extend between the guide member and a first end of the housing. Third and fourth compression springs *134* and *136* extend between the guide member and a second end of the housing. The compression springs bias the guide member toward a normal position relative to the housing when the stabilizer bar assembly is in a natural (unstressed) state. (FF 9).

The second step in determining whether the Examiner has proven obviousness is to ascertain the differences between the prior art and the claims at issue. The subject matter of claim 35 differs from that taught by Karbowniczek in that Karbowniczek fails to teach pairs of compression springs extending between the guide member and the opposite ends of the housing coaxially with the axis. (Ans. 3-4). This element is taught by Johnston.

The third step in determining whether the Examiner has proven obviousness is to resolve the level of ordinary skill in the art. The factors which may be considered in determining the level of ordinary skill include the teachings of the prior art references themselves and the sophistication of the technology. *Daiichi Sankyo Co. v. Apotex, Inc.*, 501 F.3d 1254, 1256 (Fed. Cir. 2007). Johnston refers in passing to the mechanical behavior of

pairs of linear springs mounted coaxially in a stabilizer bar assembly without setting forth Hooke's Law or other concepts of basic mechanics underlying the behavior of such springs. (*See* Johnston, col. 7, l. 50 – col. 8, l. 2 and Fig. 22). This reference suggests that one skilled in the art pertinent to the design of compression spring rods would have at least a basic understanding of mechanics in general and of the behavior of springs subject to Hooke's Law in particular.

The final step in determining whether the Examiner has proven obviousness is to determine whether the Examiner articulated reasons why the differences between the subject matter sought to be patented and the prior art are such that the subject matter as a whole would have been obvious to a person having ordinary skill in the art. The reasons for combining the teachings of the prior art may arise from the nature of the combination itself. For example, it generally is obvious to use a technique already known to improve one device in order to improve another similar device. *Dystar Textilfarben GmbH v. C.H. Patrick Co.*, 464 F.3d 1356, 1368 (Fed. Cir. 2006).

Johnston teaches the use of pairs of nested springs to provide a two-step progressive restoring force so as to permit small misalignments between structures while preventing larger misalignments which might result in instability (FF 9). Johnston's teaching would motivate one skilled in the art to improve Karbowniczek's shock absorber by substituting dual compression springs for Karbowniczek's single compression springs *114* and *128* to provide a two-step progressive restoring force on the piston rod *16* relative to each of the tube heads *28* and *30* of the cylinder *12*. Knowing at least the rudiments of mechanics, one skilled in the art could predict that

this substitution would provide a shock absorber responding with more play to smaller amplitude shocks while filtering out larger shocks.

The Appellants contend (Br. 11-12) that the teachings of Karbowniczek and Johnston would not motivate the substitution of pairs of nested springs for the single springs described in Karbowniczek because the inner springs of pairs nested over the piston rod *16* would interfere with fluid flow through valves in the piston *14*. Karbowniczek's Fig. 3, which is not reproduced here, suggests that the outer springs may abut vent ring lock collars *88* and *98* on the piston heads *106* and *120* without obstructing the valves.

On the record before us, the Appellants have not shown that the Examiner erred in rejecting claim 35. Claims 37, 38, 40-42, 44, 45 and 47 fall with claim 35.

B. The Subject Matter of Claims 36 and 43 Would Have Been Obvious From Karbowniczek in Light of Johnston

The first two steps in determining whether the Examiner has proven obviousness is to determine the scope and content of the prior art and to ascertain the differences between the prior art and the claims at issue. Claim 36 depends from claim 35 and recites that "the direction of winding of said first and third compression springs is opposite to the direction of winding of said second and fourth compression springs." Claim 43 depends from claim 42 and recites that "the direction of winding of said first compression spring is opposite to the direction of winding of said at least said second compression spring." Since the Appellants did not show that the Examiner erred in determining the subject matter of claims 35 and 42 to be

obvious, these recitations of claims 36 and 43 define the differences between claims 36 and 43, on the one hand, and the prior art, on the other. *Cf. In re Translogic Technology, Inc.*, 504 F.3d 1249, 1259 (Fed. Cir. 2007) ["[O]bvious variants of prior art references are themselves part of the public domain."].

The final step in determining whether the Examiner has proven obviousness is to determine whether the Examiner articulated reasons why the differences between the subject matter sought to be patented and the prior art are such that the subject matter as a whole would have been obvious to a person having ordinary skill in the art. One skilled in the art would have recognized that the second spring of a pair of nested compression springs may be slid over a rod during assembly in only two ways: either such that the two springs have the same winding direction or such that the two springs have different winding directions. The record lacks evidence sufficient to show that one or ordinary skill in the art would have predicted that nested compression springs having different winding directions would perform differently than springs having the same winding direction.[3] Given a range of only two options for sliding compression springs over a rod during assembly, it would have been equally obvious to try pairs of compression springs having different winding directions as to try pairs of springs having the same winding direction. *See KSR Int'l v. Teleflex Inc.*, 127 S.Ct. 1727, 1742 (2007).

---

[3] The Appellants do not argue that compression spring rods as recited in claim 35 using pairs of nested compression springs having different winding directions would produce unexpected results as compared to similar compression spring rods having springs with the same winding directions.

Johnston's Fig. 16 would have suggested the use of nested compression springs having different winding directions to bias a rod relative to a cylinder. (FF 10). To the extent that one skilled in the art required guidance to implement an apparatus biasing a rod relative to a cylinder in this fashion, Fig. 16 would have provided that guidance. In light of the teachings of Fig. 16, the Appellants have not shown that the Examiner erred in rejecting claims 36 and 43.

C. The Subject Matter of Claims 39 and 46 Would Have Been Obvious From Karbowniczek in Light of Johnston

Claim 39 depends from claim 35 and recites that "the wire diameters of said first and third compression springs are the same; and the wire diameters of said second and fourth compression springs are the same and greater than that of the first and third springs." Claim 46 depends from claim 42 and recites that "the wire diameter of said first compression spring is less than the wire diameter of said second compression spring." Since the Appellants did not show that the Examiner erred in determining the subject matter of claims 35 and 42 to be obvious, these recitations of claims 39 and 46 define the differences between claims 36 and 43, on the one hand, and the prior art, on the other. *See Translogic Technology*. As noted earlier, one skilled in the art pertinent to the design of compression spring rods would have at least a basic understanding of mechanics in general and of the behavior of springs subject to Hooke's Law in particular.

Johnston teaches the use of pairs of nested compression springs having "[v]arying spring rates" to bias rods for axial movement within cylinders. (Johnston, col. 7, ll. 48-49). One skilled in the art, having

knowledge of the rudiments of mechanics, would recognize that the use of springs having varying, that is, different spring rates would provide the designer with increased control over the amplitude response of the shock absorber. One skilled in the art would recognize also that one way to provide springs having different spring rates is to provide springs coiled from wire drawn to different wire diameters. *E.g.*, R. Kent, KENT'S MECHANICAL ENGINEERS' HANDBOOK at 10-06 (John Wiley & Sons, New York 1945). Johnston's Fig. 16 would suggest the use of pairs of nested compression springs having different wire diameters and would provide sufficient guidance to enable one skilled in the art to implement the combination. (FF 10). In light of the teachings of Fig. 16, the Appellants have not shown that the Examiner erred in rejecting claims 39 and 46.

CONCLUSION OF LAW

On the record before us, the Appellants have not shown that the Examiner erred in rejecting claims 35-47 as unpatentable under 35 U.S.C. § 103(a) over Karbowniczek in light of Johnston.

DECISION

The Examiner's rejection of claims 35-47 is affirmed.

No time period for taking any subsequent action in connection with this appeal may be extended under 37 C.F.R. § 1.136(a). *See* 37 C.F.R. § 1.136(a)(1)(iv) (2007).

AFFIRMED

vsh

FAY SHARPE LLP
1100 SUPERIOR AVENUE, SEVENTH FLOOR
CLEVELAND, OHIO 44114