UNITED STATES PATENT AND TRADEMARK OFFICE

BEFORE THE BOARD OF PATENT APPEALS
AND INTERFERENCES

Ex parte MASSACHUSETTS INSTITUTE OF TECHNOLOGY

Appeal 2008-0333
Reexamination Control 90/006,470
Patent 5,900,637
Technology Center 2800

Decided: June 30, 2008

Before JOHN C. MARTIN, LEE E. BARRETT, and MARK NAGUMO, *Administrative Patent Judges*.

BARRETT, *Administrative Patent Judge*.

DECISION ON APPEAL

This is a decision on appeal under 35 U.S.C. §§ 306 and 134(b) from the Final Rejection of claims 1, 2, 4, 8-11, 13-16, 18, 22, 23, and 25-28, which are all of the pending claims.

We affirm.

REEXAMINATION

A request for reexamination of U.S. Patent 5,900,637 ('637 patent), entitled "Maskless Lithography Using a Multiplexed Array of Fresnel Zone Plates," was filed on December 2, 2002, by Patent Owner Massachusetts Institute of Technology. The '637 patent issued May 4, 1999, to Henry I. Smith, based on Application 08/866,550, filed May 30, 1997.

BACKGROUND

The claimed invention relates to a maskless ultraviolet (UV) lithography system employing modulating means and phase zone plates.

Claim 1 is reproduced below (omissions from the original patent claim are enclosed in brackets and additions are underlined, 37 C.F.R. § 1.530(f)).

> 1. A maskless <u>UV</u> lithography system comprising:
>
> <u>a source of UV energy</u>;
>
> <u>modulating means for modulating the UV energy from said source of UV energy</u> to create a plurality of individual beams of UV energy; and
>
> an array of [Fresnel] <u>phase</u> zone plates which focus <u>said plurality of individual beams of UV energy</u> [an energy beam] into an array of images in order to create a permanent pattern on an adjacent substrate;
>
> <u>said modulating means being positioned between said source of UV energy and said array of phase zone plates</u>.

THE REFERENCES

Meyers	5,589,983	Dec. 31, 1996
Johnson	6,133,986	Oct. 17, 2000

(filed Feb. 20, 1997, which claims the priority of Provisional Application 60/012,434, filed Feb. 28, 1996)

Janos Kirz, *Phase zone plates for x rays and the extreme uv*, Journal of the Optical Society of America, Volume 64, Number 3 (March 1974), pages 301-09 (hereinafter "Kirz").

Henry I. Smith, *A Maskless X-ray Projection Pattern Generator*, Massachusetts Instituted of Technology, Cambridge, MA, distributed May 28, 1996, pages 179-80 (hereinafter "Smith").

THE REJECTIONS[1]

Claims 1, 2, 4, 8-11, 13, 16, 18, 22, 23, 25, and 26 stand rejected under 35 U.S.C. § 103(a) as unpatentable over Johnson and Kirz.

Claims 14 and 27 stand rejected under 35 U.S.C. § 103(a) as unpatentable over Johnson and Kirz, further in view of Smith.

Claims 15 and 28 stand rejected under 35 U.S.C. § 103(a) as unpatentable over Johnson, Kirz, and Smith, further in view of Meyers.

[1] A § 103(a) rejection based on Smith in view of Kirz and Swanson et al. U.S. Patent 4,895,790 (Swanson) (Final Rejection 3-4) was withdrawn at page 2 of the Answer.

FINDINGS OF FACT

'637 patent

The invention is fairly described in the summary of the invention:

> The invention provides a system and method of performing lithography without the need for a mask that contains the pattern to be exposed. More specifically, it employs an array of Fresnel zone plates to focus parallel beamlets of electromagnetic radiation so that they converge to foci on a substrate. The beamlets can be individually turned on and off by means of shutters that obstruct a beamlet, or by deflecting small mirrors that would otherwise direct a beamlet to its Fresnel zone plate. Pattern generation is accomplished by moving the substrate while multiplexing the individual beamlets on or off by means of electrical or optical signals.

Column 2, lines 55-65.

A zone plate array is shown in Figure 1, reproduced below.

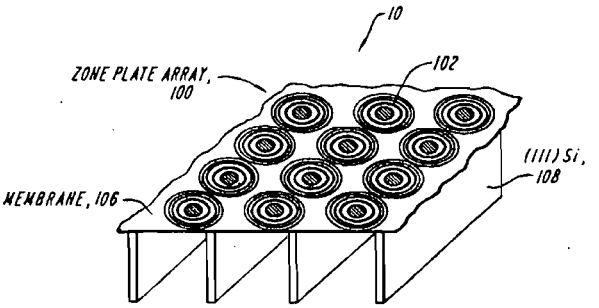

FIG. 1

Figure 1 shows an array of "Fresnel zone plates" 102 supported on a carbonaceous membrane 106 with vertical etched silicon joists 108 for rigid mechanical support (col. 3, ll. 49-65).

The '637 patent discloses:

> The membrane 106 is made of thin carbonaceous material because it is transparent to a beam source of 4.5 nm x-ray. If deep UV radiation is used, the membrane can be made of glass, and the zone plates could be made from phase zone plates, i.e. grooves cut into the glass membrane

Column 3, line 66 to column 4, line 3.

The '637 patent also explains that "'phase' zone plates" provide greater focusing efficiency than do "'amplitude' zone plates." Column 5, lines 25-32.

All of the original claims of the '637 patent (i.e., claims 1, 16, 29, and 30) recite "Fresnel zone plates," which term as used in the '637 patent appears to be generic to amplitude zone plates and phase zone plates. During this reexamination proceeding, the phrase "Fresnel zone plates" in claims 1 and 16, the only currently pending independent claims, has been changed to "phase zone plates." Amendment Under 37 C.F.R. 1.111, filed May 3, 2004, at 2-3.

Figure 2, reproduced below, shows one arrangement of the system.

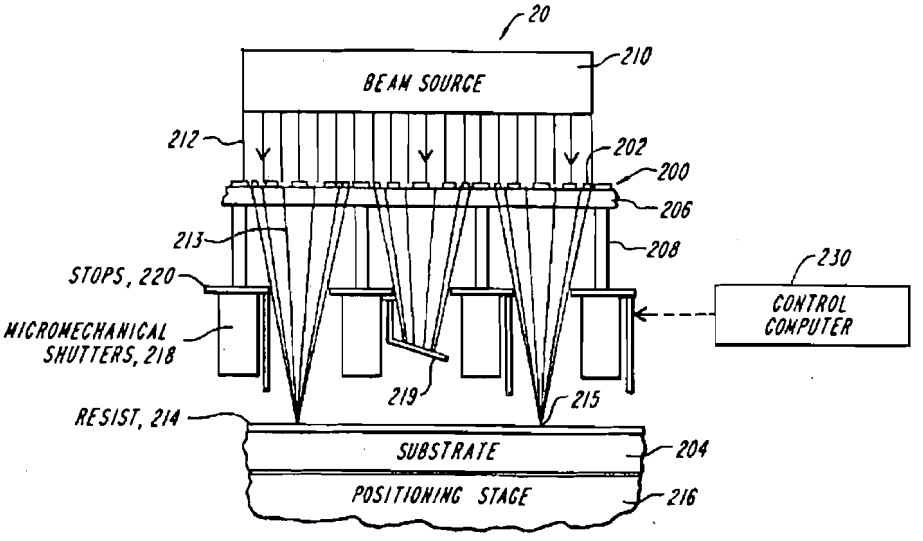

FIG. 2

Figure 2 shows the beam source 210 passing collimated beams 212 of x-rays through zone plates 202 of a zone plate array 200 to create focused individual beamlets 213, which may be turned on and off by shutters 218 located between the zone plate array and the substrate 204, under control of computer 230 (col. 4, ll. 16-27).

An alternative arrangement is shown in Figure 3, reproduced below.

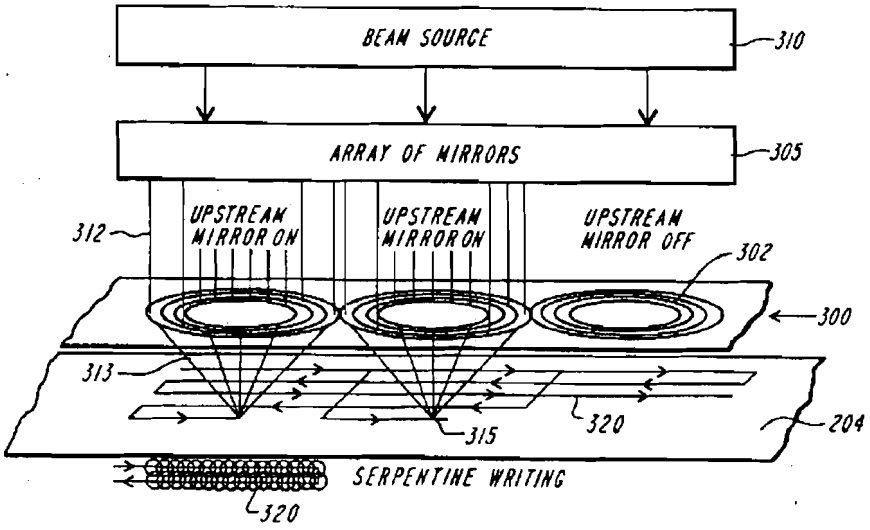

FIG. 3

Figure 3 shows a source of energy 310, an array of mirrors 305 between the source of energy 310 and the array 300 of Fresnel zone plates 302 which acts as a modulating means to form the energy into individual beamlets for each Fresnel zone plate and to turn the beamlets on and off (col. 4, ll. 29-45).

Johnson patent

Figure 2 of Johnson is shown below.

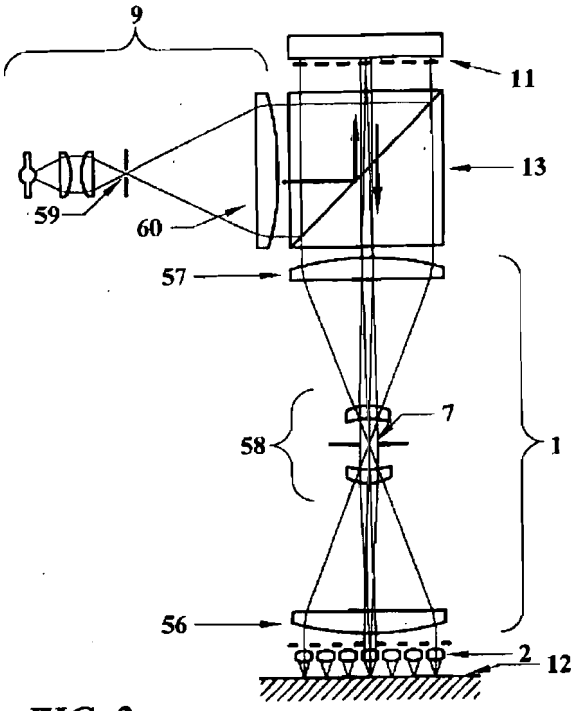

FIG. 2

Figure 2 illustrates a lithography printer having a projection system 1 which focuses an image source 11 (e.g., an array of mirrors) onto a microlens array 2, where each microlens images a microspot onto a substrate surface 12.

Johnson describes Figure 2 as follows:

> FIG. **2** illustrates an embodiment which is very similar to the microscopy system of FIG. **1**, but which could function as a lithography printer. (In this figure as well as later figures, elements corresponding to those in an earlier figure will generally be denoted with the same reference numeral.) This system also contains a low-resolution, double-telecentric projection system **1**, but in this embodiment the projection system functions to focus an image source **11** onto the microlens array **2**. The image source comprises an array of light-modulating source elements (e.g., spots or pads of variable reflectivity), with each source element being imaged onto a corresponding microlens element. The image source could be a Digital Micromirror Device (or DMD, Ref. 3), with each source element comprising an individual micromirror pixel element. Each microlens images the projection aperture **7** onto a corresponding microspot on the printing surface **12**, and each source element controls the exposure level over the corresponding microspot. The image source **11** is illuminated in reflection mode from the illumination system **9**, using a beam splitter **13** to merge the illumination into the light path.

Column 4, lines 28-48.

The light source is described as follows: "A practical embodiment of the microlithography system might use a continuous deep-UV laser light source such as a frequency-quadrupled 266 nm Nd:YAG laser . . . and a DMD image source . . . ." (Col. 6, ll. 1-4.)

Johnson describes fabricating the microlenses by reactive ion etching (cols. 12-13) and states:

> Numerous alternatives to reactive ion-etched microlenses exist for either the mastering microlens elements or the replica array. Possibilities include molded microlenses, distributed-index planar microlenses, micro-Fresnel lenses (or binary optics), and melted-resin arrays . . . .

Column 13, lines 34-38.

The difference between Johnson and the subject matter of claims 1 and 16 is that Johnson discloses that the focusing elements are "microlenses" or "micro-Fresnel lenses (or binary optics)" without indicating that they can take the form of "phase zone plates," as claimed.

Kirz

Kirz describes "Phase zone plates for x rays and the extreme uv" (page 301, title), where "phase zone plates" are also referred to in the article as "phase-reversal zone plates."

It is described that "[i]n the extreme ultraviolet and the x-ray domain the choice of optical elements is limited, and Fresnel zone plates have found increasing use here." (Page 301, left col.)

Kirz states that "[phase-reversal zone plates (phase zone plates)] are superior to Fresnel zone plates in both their light collection, and in their signal-to-noise characteristics." (Page 301, abstract.)

Thus, in Kirz, which was published in 1974, the term "Fresnel zone plate" refers to an amplitude zone plate and not to a phase zone plate. However, as noted above, Appellant's '637 patent, filed in 1997, applies the term "Fresnel" to phase zone plates and amplitude zone plates. Furthermore, Swanson, filed in 1987 and discussed *infra*, describes "Fresnel phase zone plate profiles" (Swanson, col. 2, ll. 59).[2]

The Examiner's rejections

The Examiner finds that Johnson teaches a UV light source for a lithography system (referring to col. 6, ll. 1-3), a modulating means for modulating the UV light source to create a plurality of individual beams of UV energy (referring to the array of mirrors described at col. 4, ll. 27-45), an array of microlenses to focus the individual beams of UV energy onto a substrate, and the modulating means being located between the source of UV energy and the array of microlenses (Final Rejection 4).

The Examiner finds that Johnson's statement that the microlenses may be "micro-Fresnel lenses (or binary optics)" (col. 13, ll. 37-38) teaches

[2] A "Fresnel phase zone plate" is described in Rostaei et al. U.S. Patent 5,786,582 (col. 6, ll. 28-29) (1998). Also, Fukui et al. U.S. Patent 5,909,423 (1999) describes a holographic element that "may comprise a Fresnel zone plate on which transparent and opaque rings are alternately formed, as shown in FIG. 10A, or may comprise a Rayleigh-Wood type Fresnel zone plate on which transparent rings with squared wave shaped cross section are alternately formed, as shown in FIG. 10B" (col. 15, ll. 62-67).

"Fresnel zone plates" (Final Rejection 4), and might even teach the claimed "phase zone plates" (Ans. 7).

The Examiner finds that Kirz teaches that "phase zone plates" are more efficient than "Fresnel zone plates" (Final Rejection 4).

The Examiner concludes that it would have been obvious to one of ordinary skill in the art to replace the Fresnel zone plate in Johnson with a phase zone plate in view of Kirz (Final Rejection 4).

DISCUSSION

Appellant has the burden on appeal to the Board to demonstrate error in the Examiner's position. *See In re Kahn*, 441 F.3d 977, 985-86, 78 USPQ2d 1329, 1335 (Fed. Cir. 2006) ("On appeal to the Board, an applicant can overcome a rejection [under § 103] by showing insufficient evidence of *prima facie* obviousness or by rebutting the *prima facie* case with evidence of secondary indicia of nonobviousness.") (quoting *In re Rouffet*, 149 F.3d 1350, 1355 (Fed. Cir. 1998)).

Claims stand or fall together with the independent claims

Patent Owner argues only the merits of the rejection of the two independent claims 1 and 16. Thus, the rejections of the dependent claims stand or fall with claims 1 and 16.

Obviousness

The rejections are not based on the Johnson provisional

Patent Owner argues for the first time in the Reply Brief that the disclosure in the Johnson patent at column 13, lines 34-38, is not entitled to the priority date of Provisional Application 60/012,434 (Johnson provisional) because the Johnson provisional only teaches, at page 20, the use of a Fresnel lens in the collimating element, a separate element from the microlens, and fails to teach that micro-Fresnel lenses are an alternative to the microlenses (Reply Br. 5-6). The Examiner does not respond to this argument.

It is not necessary for the Examiner to rely on the filing date of the Johnson provisional. The Johnson patent was filed on February 20, 1997, which is still before the May 30, 1997, filing date of the '637 patent and is valid prior art unless antedated. Patent Owner does not address this fact, nor attempt to antedate the Johnson patent. Although not referred to by Patent Owner, we recognize that the article by the inventor Henry I. Smith, *A proposal for maskless, zone-plate-array nanolithography*, J. Vac. Sci. Technol. B 14(6), Nov/Dec 1996 (copy enclosed), listed as a reference in the Johnson patent, contains much of the same disclosure as the '637 patent. However, even if we were to assume that this paper proves conception, a proper declaration under 37 C.F.R. § 1.131 would still be necessary to prove due diligence from prior to the filing date of the Johnson patent to the filing date of the '637 patent application. Only at this point would the Johnson provisional become relevant.

Also, we disagree with Patent Owner's argument. Page 17 of the Johnson provisional describes that the microlens may formed as shown in Figure 12, page 18, which one of ordinary skill in the optics art would recognize as a Fresnel lens, or, since it is a microlens, a micro-Fresnel lens. Page 17 discloses that the microlens may be formed by "binary optics." Thus, the Johnson provisional discloses micro-Fresnel lenses and binary optics.

Does Johnson teach "Fresnel zone plates"?

The Examiner finds that the Johnson patent teaches that the microlenses may be "micro-Fresnel lenses (or binary optics)" (col. 13, ll. 37-38) and that this teaches "Fresnel zone plates," but does not teach "phase zone plates." The Examiner finds that Kirz teaches that "phase zone plates" are more efficient than "Fresnel zone plates" and concludes that it would have been obvious to one of ordinary skill in the art to replace the Fresnel zone plate in Johnson with a phase zone plate in view of Kirz.

The dispositive issue is whether the Examiner is correct in equating "micro-Fresnel lenses (or binary optics)" to "Fresnel zone plates." Patent Owner does not dispute that it would have been obvious to substitute a "phase zone plate" for a "Fresnel zone plate" in view of Kirz.

Patent Owner argues that Examiner erred in finding that Johnson describes "Fresnel zone plates" at column 13, lines 34-38, because Johnson actually describes "micro-Fresnel lenses (or binary optics)" (col. 13, ll. 37-38), *not* "zone plates" (Br. 8). It is argued that Fresnel lenses are sloped

lenses, while "a Fresnel zone plate is a lens having a substantially uniform thickness with grooves cut therein" (Br. 8) as shown in these figures:

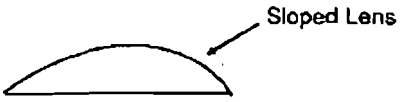

Figure 1
Fresnel Lens

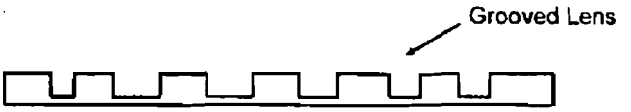

Figure 2
Fresnel Zone Plate

The Examiner responds (Ans. 6) that Patent Owner's definition of a Fresnel lens as represented by the above figures is incorrect because a Fresnel lens is composed of divided annular zones according to this description in the *Handbook of Optics, Volume II, Devices, Measurements, and Properties* (Optical Society of America 2d ed. 1995):

> A Fresnel lens is constructed from many divided annular zones, as shown in Fig. 22. Fresnel lenses are closely related to Fresnel zone plates. Both zone patterns are the same. However, unlike a Fresnel zone plate, the Fresnel lens has smooth contours in each zone, which delay the phase of the optical beam by 2π radians at the thickest point. In the central zone, the contour is usually smooth enough that it acts as a refractive element. Toward the edges, zone spacing can because

close to the wavelength of light, so the Fresnel lens exhibits diffractive properties. [Endnotes omitted.]

Handbook of Optics at page 7.18. Figure 22 is reproduced below.

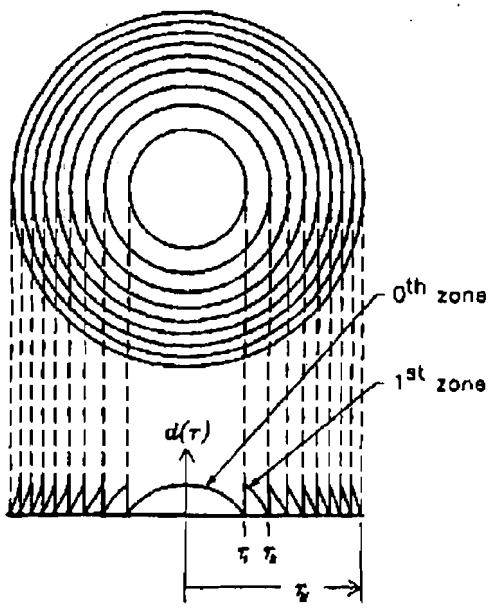

FIGURE 22 Fresnel lens construction. M divided annular zones occur at radii r_i in the same manner as a Fresnel zone plate. The profiles of each zone are given by $d(r)$, and they are optimized to yield the maximum efficiency in the focused beam.

The Examiner states:

According to this definition, Johnson's micro-Fresnel lenses might even anticipate the phase zone plates claimed in the appealed claims. This is not clear. But the "binary optics" indicated by the parenthesis at line 38 in column 13 of Johnson as being equivalent to micro-Fresnel lenses are defined in lines 2-4 of page 7.21 of the HANDBOOK as being "stepped approximations to the MFL [micro-

> Fresnel lens] smooth zone contour." Thus, these binary optic equivalents of the micro-Fresnel lenses clearly constitute Fresnel zone plates . . . .

Ans. 7. The sentence in the *Handbook of Optics* to which the Examiner refers reads: "Note that binary optics, which are described in Farn and Veldkamp's Chap. 8, (Vol. II) on 'Binary Optics[,]' are stepped approximations to the MFL smooth-zone contour." *Handbook of Optics* at 7.21. We understand the Examiner's position to be that because the surfaces of the binary optics approximation of a micro-Fresnel lens are stepped rather than smooth, the binary optics approximation constitutes a micro-Fresnel zone plate rather than a micro-Fresnel lens. The Examiner's position is consistent with Swanson's description of a similar optical structure as a Fresnel phase zone plate.[3] Figures 1A-1C of Swanson are reproduced on the next page:

[3] Swanson is assigned to Massachusetts Institute of Technology, the owner of the patent under reexamination.

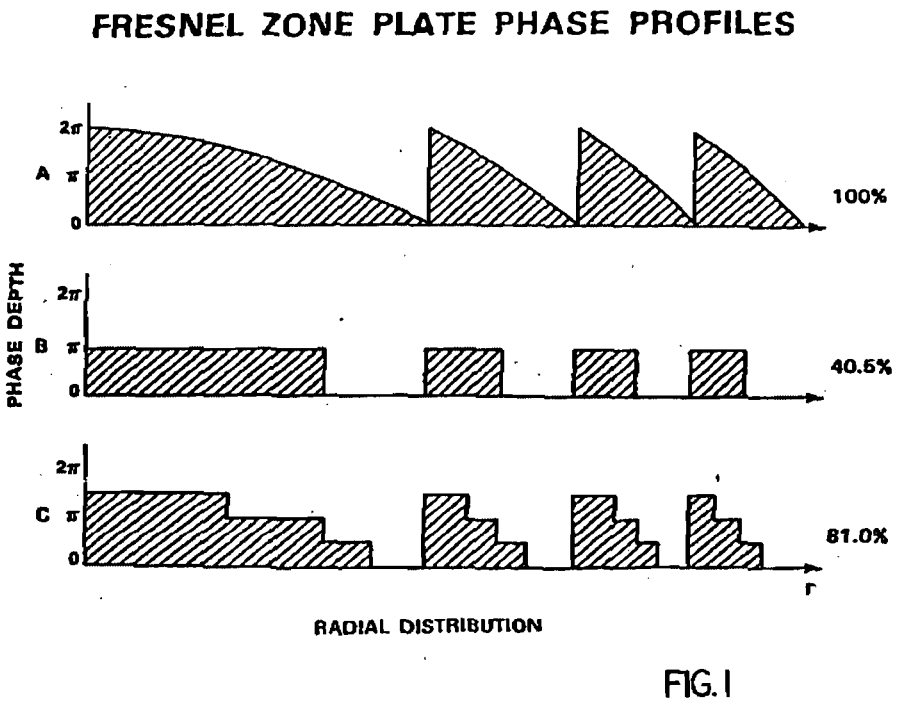

FIG. 1

Figures 1A-1C are schematic illustrations of three different Fresnel zone plate profiles. Swanson explains that "FIGS. 1b and 1c show Fresnel phase zone plate profiles quantized to two and four phase levels, respectively" (Swanson, col. 2, ll. 58-60). Each level is a different phase zone.

Patent Owner replies that a "binary optic" is a stepped approximation of a micro-Fresnel lens, while a "Fresnel zone plate is a lens having a substantially uniform thickness with groove cut therein" (Reply Br. 7) as shown in the following figures:

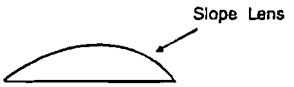

Figure 1
Fresnel Lens

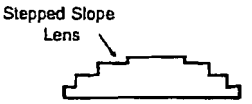

Figure 2
Fresnel Lens
(Binary Optics)

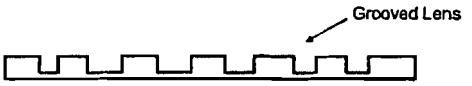

Figure 3
Fresnel Zone Plate

Appellant's response is unpersuasive for a number of reasons. In the first place, neither of the above Figures 1 and 2 includes the annular zones that are characteristic of a Fresnel lens. *Handbook of Optics* at p. 7.18. A Fresnel lens is depicted in Figure 22 of the *Handbook of Optics*, reproduced *supra*. Second, and more important, Appellant has not cited any evidence that contradicts the Examiner's finding that a binary optic approximation of a Fresnel lens is a Fresnel zone plate. In particular, Appellant has not directed our attention to any evidence of record that supports its argument that "a Fresnel zone plate is a lens having a substantially uniform thickness with grooves cut therein" (Br. 8). To the contrary, the evidence indicates that those of ordinary skill in the art would recognize and accept Swanson's description

of the four-level structure depicted in Swanson's Figure 1C as a "Fresnel phase zone plate" (col. 2, ll. 48-60).[4]

For the foregoing reasons, Appellant has failed to show that the Examiner erred in finding that Johnson's "micro-Fresnel lens (or binary optics)" language describes a Fresnel zone plate. In fact, it is evident from Figure 1C of Swanson that Johnson more particularly discloses a Fresnel *phase* zone plate.

Accordingly, the rejection of claims 1, 2, 4, 8-11, 13, 16, 18, 22, 23, 25 and 26 for obviousness over Johnson in view of Kirz is sustained, as is the rejection of claims 14 and 27 for obviousness over Johnson in view of Kirz and Smith and the rejection of claims 15 and 28 for obviousness over Johnson in view of Kirz, Smith, and Meyers.

CONCLUSION

The rejections of claims 1, 2, 4, 8-11, 13-16, 18, 22, 23, and 25-28 are sustained and the decision of the Examiner is affirmed.

AFFIRMED

Attachment:
Henry I. Smith, *A proposal for maskless, zone-plate-array nanolithography*, J. Vac. Sci. Technol. B 14(6), Nov/Dec 1996.

---

[4] Figure 3 of the Brief appears to represent a phase zone plate rather than an amplitude zone plate.

Appeal 2008-0333
Reexamination Control 90/006,470
Patent 5,900,637

MAT

Matthew E. Connors
Gauthier & Connors LLP
Suite 2300
225 Franklin Street
Boston MA 02110

A proposal for maskless, zone-plate-array nanolithography

Henry I. Smith[a)]
Department of Electrical Engineering and Computer Science, Massachusetts Institute of Technology, Cambridge, Massachusetts 02139

(Received 6 June 1996; accepted 16 August 1996)

We propose a novel form of x-ray projection lithography that: (1) requires no mask, and hence can be considered an x-ray pattern generator; (2) is, in principle, capable of reaching the limits of the lithographic process. The new scheme utilizes an array of Fresnel zone plates, and matrix-addressed micromechanical shutters to turn individual x-ray beamlets on or off in response to commands from a control computer. Zone plate resolution is approximately equal to the minimum zone width, which can approach 10 nm. Zone plates are narrow-band lensing elements: For a diffraction limited focus, the source bandwidth $\Delta\lambda/\lambda$ should be less than or equal to the reciprocal of the number of zones N. An undulator having N_u magnetic sections emits collimated radiation in a bandwidth $\Delta\lambda/\lambda = 1/N_u$. N_u is usually in the range 35–100. We present a system design based on 25 nm lithographic resolution using $\lambda = 4.5$ nm. For $N = 100$ the zone-plate diameter is 10 μm. Each zone plate of the array would be responsible only for exposure within its "unit cell." To fill in a full pattern, the stage holding the sample would be scanned in X and Y while the beamlets are multiplexed on and off. A microundulator designed for installation on a commercial compact synchrotron can provide 87 mW within a 2% bandwidth around 4.5 nm in a divergence cone of 0.28 mrad. The calculated efficiency of first-order focus for a zone plate operating at 4.5 nm is 31%, using 130 nm of spent U as the absorber/phase shifter. An exposure rate of ~1 cm^2/s at 25 nm resolution appears feasible. © *1996 American Vacuum Society.*

I. INTRODUCTION

The relationship between mask–substrate gap G and minimum feature size W in conventional x-ray lithography is given by

$$G = \alpha W^2/\lambda, \tag{1}$$

where λ is the x-ray wavelength (~1 nm) and α is in the range 1–1.5.[1–3] For feature sizes below 50 nm, the gap must be below 4 μm. Although such small gaps, and even mask–substrate contact, are feasible in research, it is questionable whether this would be acceptable in future manufacturing. Thus, one is persuaded to consider x-ray projection, especially for feature sizes below 50 nm. At x-ray and extreme UV (EUV) wavelengths there appear to be only three possible approaches to projection lithography: imaging with multilayer mirrors, in-line holography, and imaging with zone plates. The latter is the simplest and probably the most practical. In this article a novel maskless version of zone-plate-based lithography is proposed which appears to be highly attractive from the points-of-view of efficiency, throughput, and flexibility. It relies upon recent advances in micromechanics and spatial-phase-locked e-beam lithography, both of which are undergoing rapid development.

II. WHY ZONE PLATES FOR NANOLITHOGRAPHY

The imaging properties of Freznel zone plates have been understood since the late 19th century.[4] Zone plates have been used for many years in x-ray microscopy at the "water window" around 2.4 nm.[5–9] In this application they work extremely well, revealing details, for example, in biological specimens, that are not observable with either electron microscopy or conventional optical microscopy. Burge, Browne, and Charalambous were the first to propose the use of a zone plate in x-ray lithography.[10] To circumvent the problem of the very limited field-of-view of zone plates, Hector and Smith[11] and Feldman[12] proposed two different lithography schemes using arrays of zone plates. Both schemes require a mask and two zone-plate arrays in tandem. Because the focusing efficiency of zone plates in the x-ray regime is in the range 10%–33%, the need for two tandem arrays implies a focusing efficiency of only 1%–9%, at best.

The appropriate wavelength to use for sub-100 nm lithography is either 4.5 nm, at the carbon K absorption edge, or around 1 nm.[1] At the C_K edge, resists such as PMMA, which are composed primarily of C and H, attenuate only about 2 dB/μm, and hence can be quite thick. Early, Schattenburg, and Smith[13] and Ocola *et al.*[2] showed that at a wavelength around 1 nm the ranges of photoelectrons and Auger electrons do not prevent one from achieving resolutions below 30 nm. The intrinsic resolution at the 4.5 nm wavelength is ~5 nm, which is probably at or just beyond the practical limit of the lithographic process itself. For the zone-plate-array scheme described here, 4.5 nm is the optimal wavelength from the points-of-view of resolution, source characteristics, and zone plate fabrication, as described below.

III. ARRAY WRITING STRATEGIES

The proposed lithography scheme is shown schematically in Fig. 1. It does not require a mask, and employs a single zone-plate array. At a wavelength of 4.5 nm, a focusing ef-

[a)]Electronic mail: hismith@nano.mit.edu

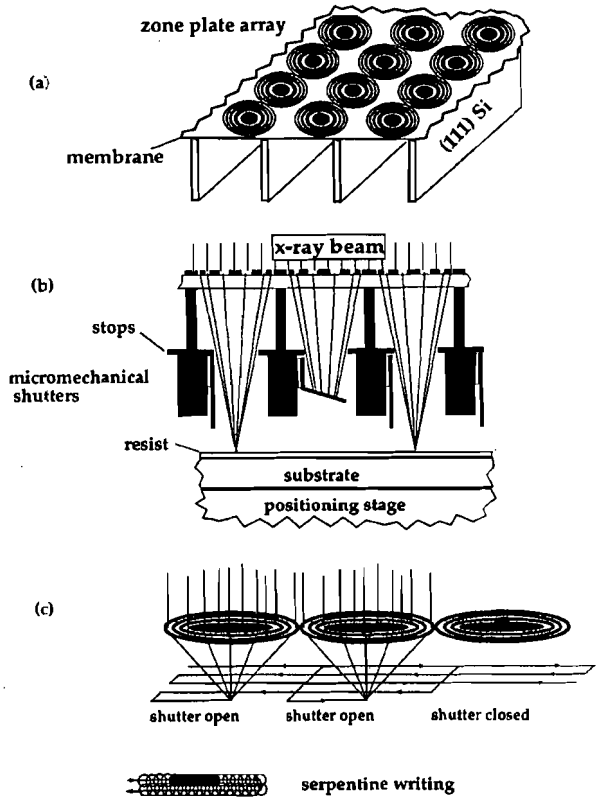

FIG. 1. Schematic view of the proposed maskless x-ray projection system. (a) Perspective view of an array of Fresnel zone plates on a (110) Si substrate. Each zone plate, which defines a "unit cell," is supported on a thin carbonaceous membrane, with vertical, anisotropically etched Si (111) "joists" for rigid mechanical support. Each zone plate is responsible for exposure only within its unit cell ($<16\times10^4$ pixels). (b) Cross section illustrating the focusing onto a resist-coated substrate, and "downstream" micromechanical shutters which turn beams on and off in response to commands from a control computer. (c) Illustration of one possible writing scheme, with the micromechanical shutters located "upstream" and the substrate scanned in X and Y by a fast piezoelectric system, thereby filling in the full pattern.

ficiency of 31% is feasible. The system is, in effect, a maskless zone-plate-array pattern generator. Each zone plate of the array is able to focus a collimated beam of x rays to a fine spot on a resist coated substrate. To write a pattern, the substrate is scanned under the array, while the individual beamlets are turned on and off as needed by means of micromechanical shutters, one associated with each zone plate. These shutters can either be "downstream," as depicted in Fig. 1(b), or "upstream," as in Fig. 1(c).

There are various ways in which the scanning and writing can be done. One is to employ a square array of zone plates, as depicted, with each zone plate "responsible" for patterning only within its "unit cell." The scanning in this case would be serpentine, with the stage moving only a distance equal to the zone-plate diameter (≤ 10 μm) in X and Y until all pixels within all the unit cell are addressed, and either written (i.e., shutter open) or not (i.e., shutter closed). The entire array would then be stepped a distance equal to its diameter and scanning repeated. An alternative to this "step-and-scan" strategy is a linear-scan strategy described by Feldman.[12] It employs a close-packed array of zone plates, rotated in such a way that all pixels can be addressed when the substrate is scanned along one direction only.

In order that lithographic features which cross boundaries between unit cells are free of stitching errors it is necessary that the zone plates be arranged in the array with a placement precision much finer than a pixel diameter. Spatial-phase-locked e-beam lithography[14] could be used to accomplish this.

IV. ZONE-PLATE ARRAY DESIGN

The principle of operation of Fresnel zone plates has been described in detail elsewhere.[4–12,15] A zone plate can be thought of as a structure of circular symmetry in which the local spatial period depends on radius in such a way that first-order diffracted radiation from any radius value crosses the axis at the same point, the focal length. For a plane wave incident the equation that describes the relationship among the first-order focal length f, the zone number n, and the zone radius R_n follows from the Pythagorean theorem and the condition for constructive interference,

$$(R_n)^2+f^2=[f+n\lambda/2]^2, \tag{2}$$

where λ is the wavelength. Letting p represent the "pitch" or period of the outermost zones, the angle of convergence to focus θ for a plane wave incident is given by

$$\sin\theta=\lambda/p. \tag{3}$$

Just as transmission diffraction gratings can be based on periodic obstruction or periodic phase shifting, so also zone plates can be based on obstruction ("amplitude" zone plates) or phase shifting ("phase" zone plates), and all intermediate types as well. Pure phase zone plates have a focusing efficiency of 40% whereas amplitude zone plates focus only 10% of the incident radiation into the positive first-order focus. Because zone plates are based on diffraction they are subject to chromatic aberration. That is, different wavelengths are focused at different axial distances. A zone plate will produce a diffraction-limited focal spot only for radiation in a bandwidth (BW) given by

$$\mathrm{BW}=1/N, \tag{4}$$

where N is the total number of zones.

The starting point of the design of a zone-plate-array pattern generator is the x-ray source since its bandwidth dictates other system parameters. The bandwidth of line radiation from inner-shell atomic transitions is sufficiently narrow in many cases for our purposes, however, such sources generally do not have sufficient brightness (i.e., photons emitted per unit area per unit solid angle). Expressed another way, such sources have sufficient temporal coherence but inadequate spatial coherence for high throughput. Synchrotron radiation has good collimation (i.e., spatial coherence) but inadequate spectral brightness (i.e., power in a narrow bandwidth). The optimal source for the zone-plate-array pattern generator is an undulator attached to a synchrotron. Such

sources, which consist of a linear array of alternating magnetic fields inserted into a straight section of a synchrotron orbit, have bandwidths given by an equation identical to Eq. (4), except that N in this case is the number of periods of the alternating magnetic field N_u. In modern undulators, permanent magnets are used with magnetic-field strengths ~0.35 T, and N_u between 35 and 100. The number of zones in the zone plates is therefore tied directly to the number of periods in the undulator. Synchrotrons, both superconducting[16] and nonsuperconducting,[17] designed specifically for lithography, are available commercially and can be provided with undulators. The following design is based on the specifications of one such undulator.[17,18]

For $p=50$ nm (i.e., 25 nm zone widths) and $\lambda=4.5$ nm, $\sin\theta=0.09$. Making the approximation $\sin\theta=\tan\theta$, we have $\lambda/p=R_N/f$. Substituting for f in Eq. (2) and solving for R_N we obtain

$$R_N=Np. \tag{5}$$

Thus, for $N=35-100$ and $p=50$ nm, the zone plate diameter D is in the range 3.5–10 μm. Substituting Eq. (5) in Eq. (2), the focal length is given by

$$f=Np^2/\lambda, \tag{6}$$

to within 0.2% accuracy. Thus, f is in the range 19–56 μm. The minimum focal spot size is approximately equal to the width of the outermost zone, i.e., $p/2$. We take this to be the pixel diameter. If, for simplicity, we ignore the space taken up by the joists in Fig. 1 (in a final design they may not be needed) the number of pixels per unit cell is given by

$$\text{pixels per unit cell}=D^2/(p/2)^2=16N^2. \tag{7}$$

Thus, there are $<1.6\times10^5$ pixels per unit cell.

The focal spot of a zone plate will be smeared out beyond its diffraction-limited value of $p/2$ because of the angular divergence of the source (i.e., nonperfect collimation). By straightforward geometry one can show that the focal spot is enlarged by the factor G, given by

$$G=1+(2Np\Delta\phi/\lambda), \tag{8}$$

where $\Delta\phi$ is the source divergence. Taking the value provided by a commercial undulator, $\Delta\phi=2.8\times10^{-4}$ rad,[17] $N=50$, $p=50$ nm, and $\lambda=4.5$ nm we find that the focal spot is smeared out by the factor 1.3, i.e., from about 25 to 33 nm.

V. THROUGHPUT

We first calculate the limit on throughput imposed by the incident x-ray flux, and then consider the problem of multiplexed parallel addressing. Although undulators installed at existing synchrotron facilities can provide adequate flux[19] we consider instead a type of undulator that could be installed on a compact synchrotron, suitable for manufacturing. For example, a "microundulator" with a period of 14 mm, installed on the Aurora 2 synchrotron,[17] would provide a first-order peak at 4.5 nm, and a flux of 1.97×10^{15} photons/s, or 87 mW, in a 2% bandwidth, suitable for diffraction-limited focusing by zone plates of ~50 zones.[18]

The power incident on a resist-coated substrate P' is given by

$$P'=P\epsilon(\pi/4)(F), \tag{9}$$

where ϵ is the efficiency of first-order focusing of the zone plate, and F accounts for loss due to various factors, including the fraction of area taken up by the joists and the attenuation of the membrane supporting the zone plate array. This membrane can also serve as the vacuum window. It would be made of diamond or other strong carbonaceous material. In our laboratory we use SiN_x membranes, 1.5 μm thick and spanning a diameter of 20 mm, as vacuum windows.[20] We show below that the overall size of the zone-plate array is $<1.3\times1.3$ mm. Hence, it should be possible to make the membrane significantly thinner than 1 μm. In order to allow for future ingenuity in the design of either the array of zone plates or the source, we assume a generous factor, $F=0.9$. As discussed below, we can take $\epsilon=0.31$, in which case $P'=19$ mW, which is spread out to fill the zone-plate array. For a resist with a sensitivity of 19 mJ/cm^2, a maximum throughput of 1 cm^2/s is predicted.

Actually, at sub-50 nm feature sizes, one should estimate throughput taking into account the stochastic nature of the resist exposure process.[21] A resist sensitivity of 19 mJ/cm^2 corresponds to an incident flux of 4.3 photons/nm^2, or ~2700 photons per pixel (25×25 nm^2). This is a very large number by the usual lithographic criterion.[21] For example, if 50% of the incident radiation is absorbed in a 100-nm-thick resist film, this corresponds to 950 J/cm^3, which is approximately the sensitivity of PMMA. It is generally understood that low-sensitivity resists such as PMMA will be required at sub-50 nm resolution.

One can expect further improvements in undulators and perhaps alternative sources (some of which are already in the conceptual stage). Hence, the calculated throughput, which is already attractive considering the fineness of the features projected, could be further enhanced. At 1 cm^2/s the equivalent "data rate" is 1.6×10^{11} Hz.

Up to the point where the undulator flux is the limiter, the throughput T is given by

$$T=d^2RM, \tag{10}$$

where d is the pixel diameter, R is the rate at which micromechanical shutters can be switched, and M is the number of shutters that can be addressed in parallel. Because the shutters would have very small masses, it should be possible to switch them at rates of several megahertz. If we assume 10 MHz switching and $d=25$ nm, $T=6.3\times10^{-5}$ M cm^2/s. Thus, the throughput would take on the maximum value of 1 cm^2/s, set by the undulator flux, if 16 000 zone-plate shutters are addressed and multiplexed in parallel (i.e., an array of 126×126). This appears to be feasible. The area occupied by 16 000 unit cells (ignoring joist area) is $<1.3\times1.3$ mm^2. Thus, it may be possible to avoid use of joists except on the perimeter of the zone plate array.

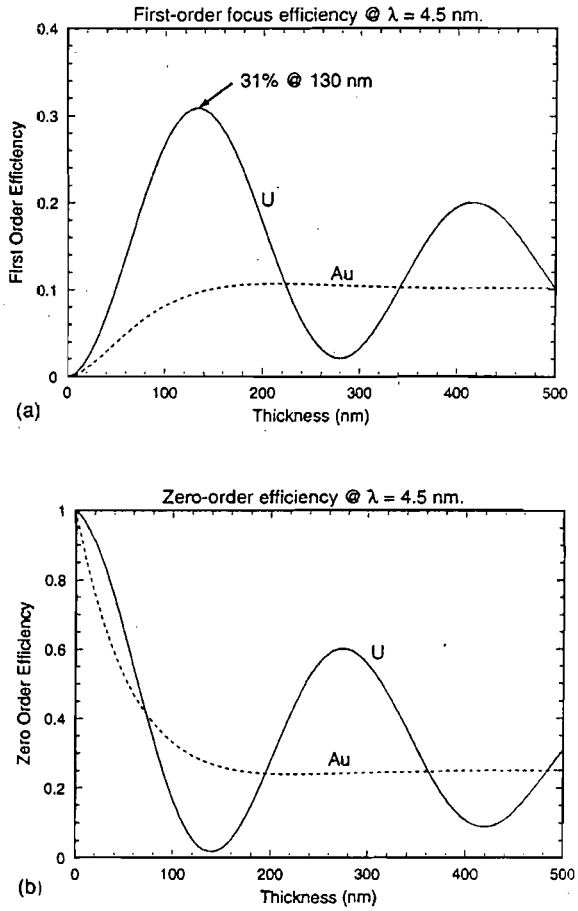

FIG. 2. (a) Plots of the fraction of incident 4.5 nm x radiation that is focused in the first-order focal spot, for zone plates made of gold and uranium, as a function of the thickness of the absorber. Note the 31% efficiency for a 130 nm thickness of U. (b) Plots of the zeroth-order efficiency for gold and U at 4.5 nm wavelength. At 130 nm thickness, uranium is nearly an ideal phase shifter.

VI. FABRICATION OF ZONE PLATES

Electron-beam lithography provides the optimal path to fabricating zone plates.[22] As first demonstrated by Shaver *et al.*,[23] it is necessary to eliminate various sources of distortion. This can be done most effectively by comparing the electron-beam scan raster to a distortion free reference grid made using interferometric lithography.[24]

Figure 2(a) is a plot of the first-order efficiency of zone plates made of uranium and gold as a function of the thickness of the absorber. Note that the efficiency of a gold zone plate never exceeds 10% whereas the efficiency of zone plates made of uranium reaches a maximum of 31% at a uranium thickness of 130 nm. This is because uranium is a nearly ideal phase shifter at $\lambda=4.5$ nm. This is further illustrated in Fig. 2(b) in which the zeroth-order (i.e., the radiation that is propagated straight ahead) is attenuated about 98% at 130 nm thickness. Spent uranium is available in large quantities. Its fluoride UF_6 is a gas, hence the material can be reactively etched in fluorocarbon plasmas, presumably at high resolution and aspect ratios compatible with the 130 nm thickness. Uranium does have the problem that it is pyrophoric, i.e., it will ignite in air; however, techniques for working with uranium have been developed at various laboratories around the world and this proposed peaceful use should be entirely welcome.

VII. SUMMARY

We have proposed a system for performing nanolithography (i.e., lithography below 100 nm feature sizes) that employs an array of Fresnel zone plates in conjunction with an undulator source and micromechanical shutters, all relatively new technologies, but separately proven. The size of the array of zone plates depends on how many shutters can be addressed in parallel. For the design example presented, i.e., 25 nm resolution, this number need not exceed 1.6×10^4 since the throughput at that point is limited by the undulator flux. Such an array would occupy an area of about 1.3×1.3 mm^2. Of course, it can be larger than this if necessary to match the area of an expanded undulator beam, in which case the shutters would be operated at a rate slower than 10 MHz.

From Eq. (7), and assuming a square array of zone plates, measuring 1.3×1.3 mm^2, a pixel diameter of 25 nm, and $N=100$, an exposure rate of 1 cm^2/s corresponds to a substrate scanning rate of 24 cm/s. Laser interferometer control of the stage should be sufficient at least in the case of a linear-scan strategy.

The maskless nanolithography system proposed here can be operated in a He gas environment for temperature homogeneity and control, which is a significant advantage over EUV and charged-particle projection systems which must be operated in vacuum.

The 4.5 nm photon is probably the ideal particle for nanolithography. The difference in energy between the C_K emission line and the binding energy of the K shell electron in carbon, the predominant species in most resists, is only 7 eV. Thus, there are no proximity effects with 4.5 nm photons. In the late 1970s, Flanders demonstrated the replication of 18 nm lines and spaces in PMMA using x rays of 4.5 nm, with the mask in contact with the resist.[25] The absorption in resist of 4.5 nm photons can be easily increased above that of PMMA by adding elements other than H or C, i.e., absorption can be tailored as lithographic considerations require (e.g., to absorb 50% in 100 nm).

ACKNOWLEDGMENTS

Grateful appreciation is extended to D. Atwood, E. H. Anderson, F. Cerrina, M. L. Schattenburg, W. Toby, E. Toyota, and S. D. Hector for help at various stages in the development of the ideas represented in this proposed maskless x-ray projection system. This work was supported by the Joint Services Electronics Program and the Defense Advanced Research Projects Agency.

[1]H. I. Smith, M. L. Schattenburg, S. D. Hector, J. Ferrera, E. E. Moon, I. Y. Yang, and M. Burkhardt, Microelectron. Eng. **32**, 143 (1996).
[2]L. E. Ocola and F. Cerrina, J. Vac. Sci. Technol. B **12**, 3986 (1994); M. Kahn, L. Mohammad, J. Ziao, L. Ocola, and F. Cerrina, *ibid.* **12**, 3930 (1994).
[3]H. I. Smith, J. Vac. Sci. Technol. B **13**, 2323 (1995).
[4]E. Hecht, *Optics* (Addison–Wesley, Reading, MA, 1987).
[5]G. Schmahl, D. Rudolph, B. Niemann, P. Guttman, J. Thieme, G. Schneider, C. David, M. Diehl, and T. Wilhein, Optik **93**, 95 (1993).
[6]J. Kirz, C. Jacobsen, and M. Howells, Q. Rev. Biophys. **28**, 33 (1994).
[7]E. Spiller, *Soft X-Ray Optics* (SPIE, Bellingham, WA, 1994).
[8]E. H. Anderson and D. Kern, in *X-Ray Microscopy III, Proceedings of the 3rd International Conference, London, U.K., 3–7 Sept. 1990*, edited by A. G. Michette, G. R. Morrison, and C. J. Buckley (Springer, Berlin, 1990), p. 75.
[9]W. Meyer-Ilse, H. Medecki, L. Jochum, E. Anderson, D. Attwood, C. Magowan, R. Balhorn, M. Moronne, D. Rudolph, and G. Schmahl, Synchrontron Radiat. News **8**, 29 (1995).
[10]R. Burge, M. Browne, and P. Charalambous, Microelectron. Eng. **8**, 227 (1987).
[11]S. D. Hector and H. I. Smith, in *OSA Proceedings on Soft-X-ray Projection Lithography*, edited by A. M. Hawryluk and R. H. Stulen (Optical Society of America, Washington, DC, 1993), Vol. 18, p. 202.
[12]M. Feldman, in *OSA Proceedings on Soft-X-ray Projection Lithography*, edited by A. M. Hawryluk and R. H. Stulen (Optical Society of America, Washington, DC, 1993), Vol. 18, p. 207; M. Feldman, in Electrochemical Society Proceedings, 1991, edited by W. Greene, G. Hefferon, and L. White, Vol. 92-6, pp. 136–146.
[13]K. Early, M. L. Schattenburg, and H. I. Smith, Microelectron. Eng. **11**, 317 (1990).
[14]J. Ferrera, V. V. Wong, S. Rishton, V. Boegli, E. H. Anderson, D. P. Kern, and H. I. Smith, J. Vac. Sci. Technol. B **11**, 2342 (1993).
[15]S. D. Hector, Ph.D. thesis, MIT, 1994.
[16]Oxford Instruments, Oxon, England.
[17]Aurora 2D, Sumitomo Heavy Industries, Ltd., Tokyo, Japan.
[18]Information on the microundulator provided by E. Toyota, Sumitomo Heavy Industries, Inc.
[19]For example, the advanced light source at Lawrence Berkeley Laboratory, D. T. Atwood (private communication).
[20]A. Moel, M. L. Schattenburg, J. M. Carter, and H. I. Smith, J. Vac. Sci. Technol. B **8**, 1648 (1990).
[21]H. I. Smith, J. Vac. Sci. Technol. B **6**, 346 (1988); **4**, 148 (1986).
[22]E. H. Anderson, V. Boegli, and L. P. Muray, J. Vac. Sci. Technol. B **13**, 2529 (1995).
[23]D. C. Shaver, D. C. Flanders, N. M. Ceglio, and H. I. Smith, J. Vac. Sci. Technol. **16**, 1626 (1979).
[24]E. H. Anderson, V. Boegli, M. L. Schattenburg, D. P. Kern, and H. I. Smith, J. Vac. Sci. Technol. B **9**, 3606 (1991).
[25]D. C. Flanders, Appl. Phys. Lett. **36**, 93 (1980).