UNITED STATES PATENT AND TRADEMARK OFFICE

BEFORE THE BOARD OF PATENT APPEALS AND INTERFERENCES

Ex parte THOMAS J. FOGARTY, MICHAEL J. DREWS, NEIL HOLMGREN, and D. BRUCE MODESITT

Appeal 2008-0434
Application 10/355,429
Technology Center 3700

Decided: March 25, 2008

Before DONALD E. ADAMS, ERIC GRIMES, and JEFFREY N. FREDMAN, *Administrative Patent Judges*.

FREDMAN, *Administrative Patent Judge*.

DECISION ON APPEAL

This is an appeal under 35 U.S.C. § 134 involving claims to a biologically implantable system for a heart valve which the Examiner has rejected as obvious. We have jurisdiction under 35 U.S.C. § 6(b). We affirm.

Background

"Prosthetic heart valves can replace defective human valves in patients" (Spec. 1). The Specification notes that "[i]n a typical prosthetic valve implantation procedure, the heart is incised and the defective valve is removed leaving a surrounding area of locally tougher tissue. Known heart valve replacement techniques include individually passing sutures through the tough tissue to form an array of sutures" (Spec. 2). According to the Specification, "[o]nce all sutures have been run through the ring, all the sutures are pulled up taught and the prosthetic valve is slid or 'parachuted' down into place adjacent the tough tissue" (*id.*). "Thereafter, the prosthetic valve is secured in place by traditional knot tying with the sutures" (*id.*).

Statement of the Case

The Claims

Claims 10-12, 16, 17, 27, 32, 33, and 35-54 are on appeal. We will focus on claims 10, 27, and 45, which are representative and read as follows:

> 10. A biologically implantable system for a heart valve, comprising:
>
> a first prosthesis comprising an annular ring implantable directly and independently into an annulus of a heart, the first prosthesis comprising a circumference and a fabric covering;
>
> a second prosthesis comprising a heart valve crown, the second prosthesis further comprising a circumference including a fabric covering thereon, the circumference defining a shape including a scallop between adjacent lobes; and
>
> at least one engagement element disposed on the circumferences of the first and second prostheses that self-engage one another when the second prosthesis is inserted

into engagement with the first prosthesis after the first prosthesis is implanted within an annulus of a heart.

27. A biologically implantable system for a heart valve, comprising:

a first annular prosthesis implantable within an annulus of a heart, the first prosthesis comprising a circumference and a fabric covering;

a second prosthesis separate from the first prosthesis and comprising a heart valve crown, the second prosthesis comprising a circumference;

a plurality of engagement elements disposed around the circumferences of the first and second prostheses that self-engage one another when the second prosthesis is inserted into engagement with the first prosthesis; and

cooperating elements on the first and second prostheses that angularly align the second prosthesis with the first prosthesis and prevent rotation of the second prosthesis with respect to the first prosthesis when the second prosthesis is inserted into engagement with the first prosthesis after the first prosthesis is implanted within an annulus of a heart.

45. A biologically implantable system for a heart valve, comprising:

a first annular prosthesis implantable into an annulus within a heart, the first prosthesis including a wall defining a circumference and a central longitudinal axis substantially perpendicular to the circumference, at least a portion of the wall being angled away from the longitudinal axis;

a second annular prosthesis comprising a valve; and at least one engagement element on the first and second prostheses that engage one another when the second prosthesis is inserted into engagement with the first prosthesis after the first prosthesis is implanted within an annulus of a heart.

The prior art

The Examiner relies on the following prior art reference to show unpatentability:

Alonso	US 4,680,031	Jul. 14, 1987
Stobie	US 6,143,025	Nov. 7, 2000
Shu	US 2004/0015232 A1	Jan. 22, 2004
Berreklouw	US 6,790,229 B1	Sep. 14, 2004

The issues

The rejections as presented by the Examiner are as follows:

A. Claims 10-12, 16, 17, 27, 32, 33, 35-40, 43, and 45-51 stand rejected under 35 U.S.C. § 102(b), as being anticipated by Alonso.

B. Claim 54 stands rejected under 35 U.S.C. § 103(a), as being obvious over Alonso and Stobie.

C. Claims 41, 42, 44, 52, and 53 stand rejected under 35 U.S.C. § 103(a), as being obvious over Alonso and either Shu or Berreklouw.

A. 35 U.S.C. § 102(b) rejection over Alonso

The Examiner argues regarding the limitation found in claim 10 of "self engagement" that the "threads of the sewing ring (30) and stent support ring (34), respectively, are the respective engagement elements that self-engage each other" (Ans. 6). The Examiner further contends that "'self-engage' does not imply that any particular motion or lack thereof is required. Moreover, upon review of the specification, it is clear that [there] is no special definition for this terminology" (*id.*).

Regarding the limitation in claim 10 requiring a scallop, the Examiner contends that "Alonso illustrates at least one scallop between adjacent lobes

in element (36) of Figure 1" (Ans. 7). The Examiner supports this point by noting that "[m]oreover, a scallop (i.e. scallop shape) is not a well-defined shape such as that of a geometrical shape; e.g. square or circle. Rather, it has been used to describe many features including decorative ornamental edges or thin slices of meat" (*id.*).

With regard to claim 27, the Examiner argues that "[s]ince Alonso clearly discloses an operative lock of the two elements, the claim language requiring rotation prevention is considered at least read on by Alonso's disclosure" (Ans. 8).

Appellants argue that the

> Alonso reference fails to disclose, teach, or suggest 'at least one engagement element disposed on the circumferences of the first and second prostheses that self-engage one another when the second prosthesis is inserted into engagement with the first prosthesis after the first prosthesis is implanted within an annulus of a heart' as recited in claim 10.

(App. Br. 8).

Appellants further contend that "merely bringing the threaded rings 30, 34 together, without rotation of the stent support ring 34 by a user, will not engage the stent support ring 34 to the sewing ring 30. As such, the threaded rings 30 and 34 cannot be 'self-engaging'" (Rep. Br. 6). Appellants also argue that it "is also well understood by persons of ordinary skill in the art that 'engage' and 'self-engage' are not synonymous since 'self-engage' is narrower than the term 'engage' given the additional word 'self'" (Rep. Br. 7).

In addition, Appellants argue that "Alonso reference fails to disclose, teach, or suggest a second prosthesis having a circumference defining a

shape including 'a scallop between adjacent lobes' as recited in claim 10" (App. Br. 14). Appellants further note that "the components described in the [Alonso] reference must necessarily be circular in order to allow the internally threaded ring 30 and externally threaded stent support ring 34 to threadedly mate together when the externally threaded stent support ring 34 is rotated" (App. Br. 13).

Appellants contend regarding claim 27 that Alonso does not teach "that after the first prosthesis or ring is implanted, the second prosthesis cannot be rotated" (App. Br. 14). Appellants argue that Alonso teaches "rotation of the stent support ring 34 <u>after</u> the sewing ring 30 has been implanted and the rings 30 and 34 are threadedly secured together" and that "the Alonso reference notes the particular advantages that post-surgical rotation of the stent support ring 34 can provide" (App. Br. 15).

In view of these conflicting positions, we frame the anticipation issues before us as follows:

(1) Does Alonso teach heart valve prostheses which are "self engaging"?

(2) Does Alonso teach heart valve prostheses which comprise a "scallop between adjacent lobes"?

(3) Does Alonso teach prostheses which prevent rotation after the second prosthetic element is inserted into the first prosthetic element as required by claim 27?

(4) Does Alonso teach a prosthesis with an angled wall?

(5) Does Alonso teach a prosthesis with cooperating elements including a rib and groove?

Findings of Fact

1. Alonso teaches "an artificial heart valve implant which is designed to maximize the area available for blood flow in the mitral, aortic or tricuspid annulus where the implant is surgically mounted" (Alonso 3:24-27).

2. Alonso teaches a first prosthestic element that is the sewing ring 30, which "embeds the first cloth tube 38 . . . so that the interior threads 40 of the sewing ring 30 are disposed within the interior 44 of the first cloth tube 38 and the exterior wall 42 of the sewing ring 30 is disposed on the exterior 46 of the first cloth tube 38" (Alonso 5:53-58, fig. 1).

3. Alonso teaches that the "surgeon . . . first implants the sewing ring 30 into the mitral, aortic or tricuspid annulus" (Alonso 7:62-63).

4. Alonso discloses a second prosthestic element that is the stent 32 and stent support 34, and that these have fabric coverings:

> to assemble the stent 32 to the stent support ring 34 for the heart valve prostheses . . . the second cloth tube 62 is folded over the interior wall 60 of the stent support ring 34. In this manner, the stent support ring 34 is fully enclosed in the second cloth tube 62 and a cloth pocket 67 is formed wherein the stent 32 is mounted by sewing and stitches 50

(Alonso 6:34-41, fig. 1-3).

5. Alonso teaches "three commissural posts 70" which are rounded extensions from the stent 32 (Alonso 7:23-25; Fig. 1).

6. Alonso teaches that the "square threads 40 of the sewing ring 30 readily engage the like threads 58 of the stent support ring 34 within approximately one turn or less" (Alonso 7:66-8:1).

7. Alonso teaches that the "pressure of the stent support ring 34 on the lip 78 locks the stent support ring 34 into operative position in the sewing ring 30" (Alonso 8:1-3).

8. Appellants' Specification does not define the term "self engagement", but states "there is a need for the above prosthesis that can self-engage a second prosthesis to improve implantation time" (Spec. 4:3-4).

9. Appellants' Specification teaches in figure 52, one embodiment for engagement of the first and second prostheses in which in order for the second prosthesis to be engaged, the "interference beams 198 can be removed, as shown by arrows 200, allowing the latches 188 to contract, as shown by arrows 196, against, for example, the second prosthesis, once the second prosthesis is positioned within the reach of the latches 188" (Spec. 21:5-8, fig. 52).

10. Appellants' Specification teaches another embodiment for engagement of the first and second prostheses with a "second prosthesis 68 that can have fixation points 286 that align with fixation points 286 on the first prosthesis 2 to allow insertion of sutures, grommets, clips 292 or pins 294 through the aligned fixation points 286 to fix the first prosthesis 2 to the second prosthesis 68" (Spec. 27:23-28:3).

11. Alonso teaches a padded cloth ring 54 which is perpendicular to the circumference and which is angled away from the longitudinal axis (*see* Alonso, fig. 6-7). Figure 6 of Alonso appears to show the padded cloth ring 54 projection is at a 90 degree angle, while figure 7 appears to show the padded cloth ring 54 at an angle that is greater than 90 degrees and angled away from the longitudinal axis (*see* Alonso, fig. 6-7).

Discussion of 35 U.S.C. § 102(b) over Alonso

We conclude that the Examiner has set forth a prima facie case that claims 10, 37, and 45 are anticipated by Alonso. Alonso teaches heart valve prostheses with a first prosthetic ring with a fabric covering, a second prosthetic element with fabric which comprises an engagement element to engage the first and second prostheses after implantation into an annulus of a heart (FF 1-10).

(1) Self-Engagement

The first argued difference between the Alonso prostheses and the prosthesis of claim 10 is whether Alonso teaches elements which "self engage" the first and second prostheses.

In analyzing this difference, we first interpret the claim and the term "self engage". Claim 10 requires that "at least one engagement element disposed on the circumferences of the first and second prostheses . . . self-engage one another when the second prosthesis is inserted into engagement with the first prosthesis after the first prosthesis is implanted within an annulus of a heart" (Claim 10).

The Specification does not define the term "self engage" (*see* Rep. Br. 7). As Appellants note, the term is therefore interpreted using the broadest reasonable interpretation "in view of the specification" (Rep. Br. 7). *See, e.g., In re Hyatt,* 211 F.3d 1367, 1372 (Fed. Cir. 2000) ("[D]uring examination proceedings, claims are given their broadest reasonable interpretation consistent with the specification."). In the current Specification, several alternative modes of engagement are detailed for the first and second prosthetic element (FF 8-10). In the mode of engagement

depicted in figure 52 and discussed at page 21, the engagement requires the removal of interference beams 198, which "allow[s] the latches 188 to contract, as shown by arrows 196, against, for example, the second prosthesis, once the second prosthesis is positioned within the reach of the latches 188" (Spec. 21:6-8). A different mode of engagement is discussed at page 28 of the Specification, where the engagement comprises the "insertion of sutures, grommets, clips 292 or pins 294 through the aligned fixation points 286 to fix the first prosthesis 2 to the second prosthesis 68" (Spec. 27:23-28:3). Two other modes of engagement, snap fitting and magnet interaction, are found in claims which the Examiner has indicated as allowed (*see* Claims 20-23). These examples demonstrate that "engagement" in the context of the Specification encompasses initial interactions of the first and second prostheses, whether by positioning as at page 21 or by aligning as at page 28 followed by action by the surgeon to ensure that the prostheses remained in contact with one another.

We therefore interpret the phrase "self engagement" as simply requiring the first and second prostheses to interact when they are placed in contact. We conclude that Alonso's threads are seated and interact when placed in contact with one another and therefore meet the "self engagement" requirement of claim 10. We are not persuaded by Appellants' argument that "placing threaded components together, without additional manipulation or rotation, will not connect or engage the components to one another" (App. Br. 11). This same argument could be made about most of the modes by which the Specification places two components together. Without pressure by the surgeon on the two components, the snap fit connection will not be

formed, as the Specification notes "[o]nce seated on the engagement element 148, the second prosthesis 68 can then be engaged by the first prosthesis 2" (Spec. 27:2-3). Similarly, the interactions in which beam 198 is removed or in which pins are inserted into point 286 also require additional manipulation to complete the interaction after the first and second prostheses are "self engaged".

We reject Appellants' argument that "the term 'self-engage' within the context of the present claims does imply, and necessarily requires, lack of a particular motion" (Rep. Br. 6). We think that in light of Appellants' Specification, which does not define the term "self-engage" and which requires particular motions for most forms of locking engagement, "self-engage" encompasses the interaction shown in Alonso (*see* FF 8-10). Whether a snap-fit connection or a pin 294 is placed into fixation point 286, the completion of the engagement requires particular motions. Consequently, we conclude that Alonso teaches a mode of engagement which, when read in light of the Specification, is reasonably interpreted as a type of "self engagement".

(2) Scallop

"Scallop" is another term which is the subject of dispute between the Examiner and Appellants (*see* Ans. 7; App. Br. 13). We interpret the term "scallop" using the broadest reasonable interpretation in light of the Specification. *See, e.g., In re Hyatt*, 211 F.3d 1367, 1372 (Fed. Cir. 2000) ("[D]uring examination proceedings, claims are given their broadest reasonable interpretation consistent with the specification."). The Specification discloses two images which are termed "scallops" but no

definition of this term (*see* Spec. 29:16, 30:1, 4, fig. 79, 81). However, we do not read limitations from the Specification into the claims. *See In re American Academy Science Tech Center*, 367 F.3d 1359, 1369 (Fed. Cir. 2004)("We have cautioned against reading limitations into a claim from the preferred embodiment described in the specification, even if it is the only embodiment described, absent clear disclaimer in the specification."). Therefore, we must determine whether Alonso's second prosthesis has any structure which may meet the "scallop" requirement.

The "three commissural posts 70" shown in figure 1 of Alonso, are rounded extensions from the stent 32 (*see* Alonso 7:23-25, fig. 1). Between these posts are rounded edges which are part of the circumference of the second prosthesis (*see* Alonso, fig. 1). A scallop is defined as "one of a continuous series of circle segments or angular projections forming a border". Merriam Webster Collegiate Dictionary 1633 (1998). We note that the claim 10 language "the circumference defining a shape including a scallop between adjacent lobes" does not require that the scallop be located in the annular plane. Therefore, the region between the "three comissural posts 70" shown in figure 1 of Alonso reasonably appear to be scallops.

(3) Claim 27 rotation lock

We agree with the Examiner that Alonso teaches elements which prevent rotation of the second prosthesis relative to the first prosthesis as required by claim 27. Alonso states that the "pressure of the stent support ring 34 on the lip 78 locks the stent support ring 34 into operative position in the sewing ring 30" (Alonso 8:1-3). This statement expressly indicates that the two prosthetic elements are locked together (*see* FF 7). Appellants argue

that "the Alonso reference explains that if the heart valve prosthesis must be removed at 'a later time,' removal of the stent support ring 34 from the sewing ring 30 is 'relatively easy because the square threads readily separate from one another'" (App. Br. 15). We do not find this argument persuasive since simply because a later surgeon may remove the valve of Alonso does not detract from Alonso's express teaching that the pressure locks the elements together (*see* FF 7).

Appellants also conflate the question of whether the prosthetic elements of Alonso are ever able to rotate with the question of whether, when fully implanted into a patient, the prosthetic elements rotate (*see* Rep. Br. 11). While there is no doubt that during the implantation or during a removal process, the prostheses of Alonso permit rotation, Alonso expressly states that after implantation, the "pressure of the stent support ring 34 on the lip 78 locks the stent support ring 34 into operative position in the sewing ring 30" (Alonso 8:1-3). While Appellants would discount the word "lock", we agree with the Examiner that the term is reasonably interpreted as preventing movement of the prosthetic parts. As the Examiner noted "[i]f the two elements were not locked than the valve of Alonso would not be operative in that it would screw apart and come apart while implanted. Since US patents are presumed to be operative, this is not a reasonable interpretation of Alonso's disclosure" (Ans. 8).

(4) Angled wall

Appellants argue that Alonso does not teach the claim 45 limitation of a "first annular prosthesis including a wall defining a circumference and a central longitudinal axis substantially perpendicular to the circumference, 'at

least a portion of the wall being angled away from the longitudinal axis' (App. Br. 16). We reproduce figure 7 of Alonso below.

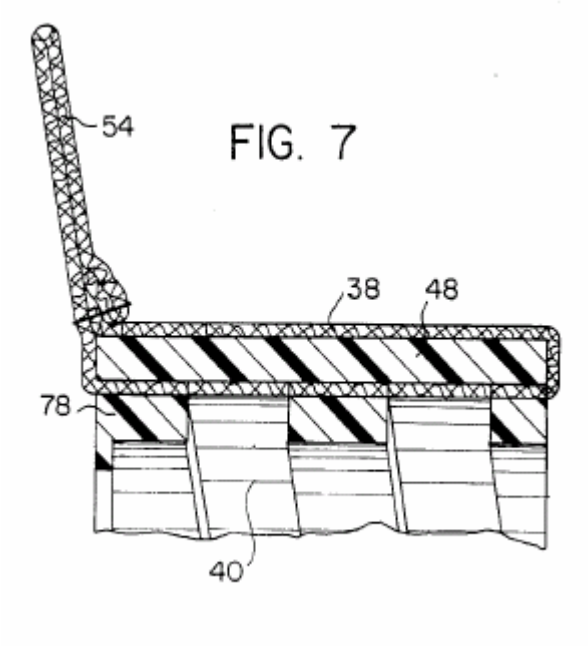

The figure shows a cross-section of the sewing ring 30 shown in Alonso's figure 4 (Alonso 4:37-38). The longitudinal axis of the prosthetic element shown in Alonso's Figure 7 is right-to-left. We conclude that Alonso shows at least part of the walls of a first prosthetic element which have an angle that is angled away from the longitudinal axis (*see* FF 11). Since the angle of padded wall ring 54 is not on the longitudinal axis, it is necessarily angled away from that axis to some degree (*see* FF 11). We therefore agree with the Examiner that Alonso teaches this element of claim 45.

(5) Rib and groove cooperating elements

We reject Appellants' argument that Alonso does not teach features which meet the "cooperating element" and "rib and groove" requirements of claims 11, 12 and 33 because the threads cannot serve both the

"engagement" and "cooperating element" functions (*see* App. Br. 17). We agree with the Examiner that the thread components function both as engagement elements and as cooperating elements. The engagement occurs when the threads meet, and the cooperating occurs when the second prosthesis is rotated so that the threads align and lock the second prosthesis into the operative position (*see* FF 7).

We affirm the rejection of claims 10-12, 27, 33, and 45 as anticipated by Alonso. Claims 16, 17, 32, 35-40, 43, and 46-51 fall with claims 10-12, 27, 33, and 45 as they were not separately argued.

B. 35 U.S.C. § 103(a) rejection over Alonso and Stobie

We have already concluded that Alonso anticipates claims 10-12, 16, 17, 27, 32, 33, 35-40, 43, and 45-51 as discussed above. Since Appellants do not separately argue the limitations of claim 54 which depends from claim 45, we affirm the rejection of claim 54 over Alonso and Stobie.

C. 35 U.S.C. § 103(a) rejection over Alonso and either Shu or Berreklouw

The Examiner argues that "it would have been obvious to replace the screw thread attachment of Alonso with a removable snap fit attachment for the same reasons that the prior art uses the same and so that the valve could be attached to the ring more quickly" (Ans. 5). The Examiner also contends that "it is clear that Alonso clearly states that the threaded design merely enables better attachment of the cloth to the base material . . . it is clear to the Examiner that it is not required in that the other attachment features apparently can be used at the same time" (Ans. 9).

Appellants argue that "the Alonso reference repeatedly refers to a sewing ring 30 and stent support ring 34 that are threadedly mountable by rotating the ring and particular advantages that are achieved with these threaded components" (App. Br. 19). Appellants also contend that "the Alonso reference criticizes and teaches away from non-threaded components" (*id.*). Appellants also argue that "the Alonso reference, as discussed above, makes it even 'clearer' that that threaded engagement is in fact required, and that threaded components are particularly advantageous" (Rep. Br. 14).

In view of these conflicting positions, we frame the obviousness issue before us as follows:

Would it have been obvious to substitute a snap fitting connection of Shu or Berreklouw for the threaded connection of Alonso?

Findings of Fact

12. Alonso teaches the use of threaded sewing rings as the means for connecting the stent support ring with the sewing ring (*see* Alonso 5:52-60, 7:64-68).

13. Alonso teaches that "prior art valve implants which had relatively complex mounting mechanisms" (Alonso 3:5-6).

14. Shu teaches that a variety of equivalent means can be used to connect the ring and valve body, including "[m]ating male and female screw threads, snaps, fabric hooks, screws, or other interlocking mechanisms" (Shu 2, ¶ 13).

15. Berreklouw teaches that "[a]ccording to the invention[,] the top closure can comprise a screw ring or snap-fit ring and/or resilient lips" (Berreklouw 7:38-39).

Discussion of 35 U.S.C. § 103(a) over Alonso and either Shu or Berreklouw

We agree with the Examiner that Alonso when combined with either Shu or Berreklouw teach the snap fit elements (*see* Ans. 9). We are not persuaded by Appellants' argument that because Alonso preferred a threaded engagement, it would have been unobvious to use other known equivalent means to connect the ring and valve. In *KSR*, the Supreme Court indicated that "[w]hen a work is available in one field of endeavor, design incentives and other market forces can prompt variations of it, either in the same field or a different one. If a person of ordinary skill can implement a predictable variation, § 103 likely bars its patentability." *KSR v. Teleflex Inc*., 127 S. Ct. 1727, 1740 (2007). While Alonso teaches threaded engagement mechanisms (FF 12-13), Shu and Berreklouw teach that in the field of heart valve prosthestic elements, the art recognizes the equivalence of threaded engagement and snap fit engagements (*see* FF 14-15). We conclude that the substitution of the snap fit for its threaded engagement equivalent is a predictable variation, which is obvious.

We also reject Appellants' argument that Alonso teaches away from the invention because Alonso prefers a threaded engagement mechanism. This preference does not "teach away" from alternatives, but simply teaches towards a preferred embodiment (*see* FF 12-13). Like our appellate reviewing court, "[w]e will not read into a reference a teaching away from a

process where no such language exists." *DyStar Textilfarben GmbH & Co. Deutschland KG v. C.H. Patrick Co.*, 464 F.3d 1356, 1364 (Fed. Cir. 2006).

We affirm the rejection of claims 41, 42, 44, 52, and 53 as obvious over Alonso with either Shu or Berreklouw.

CONCLUSION

In summary, we affirm the rejection of claims 10-12, 27, 33, 41, 42, 44, 45, 52, and 53 under 35 U.S.C. § 103(a). Pursuant to 37 C.F.R. § 41.37(c)(1)(vii)(2006), we also affirm the rejections of claims 16, 17, 32, 35-40, 43, 46-51, and 54 as these claims were not argued separately.

No time period for taking any subsequent action in connection with this appeal may be extended under 37 C.F.R. § 1.136(a)(1)(iv)(2006).

AFFIRMED

saj

VISTA IP LAW GROUP LLP
2040 MAIN STREET, 9TH FLOOR
IRVINE, CA 92614

Notice of References Cited	Application/Control No. 10/355,429	Applicant(s)/Patent Under Reexamination FOGARTY ET AL.	
	Examiner Paul Prebilic	Art Unit 3700	Page 1 of 1

U.S. PATENT DOCUMENTS

*		Document Number Country Code-Number-Kind Code	Date MM-YYYY	Name	Classification
	A	US-			
	B	US-			
	C	US-			
	D	US-			
	E	US-			
	F	US-			
	G	US-			
	H	US-			
	I	US-			
	J	US-			
	K	US-			
	L	US-			
	M	US-			

FOREIGN PATENT DOCUMENTS

*		Document Number Country Code-Number-Kind Code	Date MM-YYYY	Country	Name	Classification
	N					
	O					
	P					
	Q					
	R					
	S					
	T					

NON-PATENT DOCUMENTS

*		Include as applicable: Author, Title Date, Publisher, Edition or Volume, Pertinent Pages)
	U	Merrian Webster Collegiate Dictionary 1633 (1998).
	V	
	W	
	X	

*A copy of this reference is not being furnished with this Office action. (See MPEP § 707.05(a).)
Dates in MM-YYYY format are publication dates. Classifications may be US or foreign.

Merriam-Webster's Collegiate® Dictionary

DELUXE EDITION

Merriam-Webster, Incorporated
Springfield, Massachusetts

A GENUINE MERRIAM-WEBSTER

The name *Webster* alone is no guarantee of excellence. It is used by a number of publishers and may serve mainly to mislead an unwary buyer.

Merriam-Webster™ is the name you should look for when you consider the purchase of dictionaries or other fine reference books. It carries the reputation of a company that has been publishing since 1831 and is your assurance of quality and authority.

Copyright © 1998 by Merriam-Webster, Incorporated

Philippines Copyright 1998 by Merriam-Webster, Incorporated

Also published as
Merriam-Webster's Deluxe Dictionary, Tenth Collegiate Edition
by The Reader's Digest Association, Inc.

Library of Congress Cataloging in Publication Data
Main entry under title:

Merriam-Webster's collegiate dictionary. — Deluxe ed.
p. cm.
Includes index.
ISBN 0-87779-714-5 (alk. paper)
1. English language—Dictionaries. I. Merriam-Webster, Inc.
PE1628.M36 1998b
423—dc21 98-13387
CIP

COLLEGIATE is a registered trademark of Merriam-Webster, Incorporated

All rights reserved. No part of this book covered by the copyrights hereon may be reproduced or copied in any form or by any means—graphic, electronic, or mechanical, including photocopying, taping, or information storage and retrieval systems—without written permission of the publisher.

Made in the United States of America

456QWV0100

obsolete : LADDER **b** *archaic* : a means of

graduated series of musical tones ascending or descending in order of pitch according specified scheme of their intervals

something graduated especially when used measure or rule: as **a** : a series of marks points at known intervals used to measure (as the height of the mercury in a meter) **b** : an indication of the relation between the distances on a map and the corresponding actual distances **c** : RULER 3

a graduated series or scheme of rank or (a *scale* of taxation) **b** : MINIMUM WAGE 2

a proportion between two sets of dimen- (as between those of a drawing and its original) **b** : a distinctive relative size, extent, degree (projects done on a large *scale*)

graded series of tests or of performances in rating individual intelligence or movement

scale adjective

scale : according to the proportions established scale of measurement (floor drawn *to scale*)

noun [⁵*scale*] (circa 1587)

obsolete : ESCALADE

estimate of the amount of sound lumber logs or standing timber

armor *noun* (1842)

of small metallic scales on leather or

down \'skā(ə)l-ˌdau̇n\ *noun* (1931)

reduction according to a fixed ratio (a *down* of debts)

insect *noun* (1840)

of numerous small but very prolific ho- insects (superfamily Coccoidea) have winged males, wingless scale- females attached to the host plant, and that suck the juices of plants and some which are economic pests — compare LAC

like \'skā(ə)l-ˌlīk\ *adjective* (1883)

resembling a scale (*scalelike* design); *specif-* reduced to a minute appressed element resembling a scale

lene \'skā-ˌlēn, skā-'\ *adjective* [Late Lat- *scalēnus*, from Greek *skalēnos*, literally, un- perhaps akin to Greek *skolios* crooked, leg — more at ISOSCELES] (1734)

triangle : having the three sides of un- length — see TRIANGLE illustration

er \'skā-lər\ *noun* (1568)

that scales

dental instrument for removing tartar teeth

electronic device that operates a record- produces an output pulse after a specified of input impulses

up \'skā-ˌləp\ *noun* (1945)

increase according to a fixed ratio

\'skōl\ *noun* [Middle English, from Old *skalli* bald head; akin to Swedish *skulle* (14th century)

or scabby disorder (as of the scalp)

on \'skal-yən\ *noun* [Middle English from Anglo-French *scalun*, from (as- Vulgar Latin *escalonia*, from Latin *as- (caepa)* onion of Ascalon, from femi- *ascalonius* of Ascalon, from *Ascalon-*, Ascalon, seaport in southern Palestine] century)

SHALLOT

onion forming a thick basal portion bulb; *also* : GREEN ONION

op \'skā-ləp, 'ska-, 'skȯ-\ *noun* [Middle *scalop*, from Middle French *escalope* Germanic origin; akin to Middle *schelpe* shell] (15th century)

of numerous marine bivalve lamelli- mollusks (family Pectinidae) that have ribbed shell with the edge undulated swim by opening and closing the the adductor muscle of a scallop as of food

2 a : a valve or shell of a scallop **b** : a baking dish shaped like a valve of a scallop

3 : one of a continuous series of circle segments or angular projections forming a border

4 : PATTYPAN

5 [French *escalope*, probably from Middle French, shell] : a thin slice of boneless meat (as veal)

²scallop (1737)

transitive verb

1 [from the use of a scallop shell as a baking dish] : to bake in a sauce usually covered with seasoned bread or cracker crumbs ⟨*scalloped* potatoes⟩

2 a : to shape, cut, or finish in scallops **b** : to form scallops in

intransitive verb

: to gather or dredge scallops

scal·lop·er \-lə-pər\ *noun* (circa 1881)

1 : a person who dredges for or gathers scallops

2 : a boat equipped and used to dredge for scallops

scal·lo·pi·ni *or* **sca·lop·pi·ne** \ˌskä-lə-'pē-nē, ˌska-\ *noun* [Italian *scaloppine*, ultimately from French *escalope* thin slice of meat, probably from Middle French, shell] (1946)

: thin slices of meat (as veal) sautéed or coated with flour and fried

scal·ly·wag *variant of* SCALAWAG

sca·lo·gram \'skā-lə-ˌgram\ *noun* [⁶*scale* + *-o-* + *-gram*] (1944)

: an arrangement of items (as problems on a test or features of speech) in ascending order so that the presence or accomplishment of an item at one level implies the presence of or the capability to accomplish items at all lower levels

¹scalp \'skalp\ *noun* [Middle English, of Scandinavian origin; akin to Old Norse *skālpr* sheath; akin to Middle Dutch *schelpe* shell] (14th century)

1 a : the part of the integument of the human head usually covered with hair in both sexes **b** : the part of an animal (as a wolf or fox) corresponding to the human scalp

2 a : a part of the human scalp with attached hair cut or torn from an enemy as a token of victory (as by Indian warriors of North America) **b** : a trophy of victory or accomplishment

3 *chiefly Scottish* : a projecting mass of bare ground or rock

²scalp (1676)

transitive verb

1 a : to deprive of the scalp **b** : to remove an upper part from

2 : to remove a desired constituent from and discard the rest

3 : to buy and sell so as to make small quick profits ⟨*scalp* stocks⟩ ⟨*scalp* grain⟩; *especially* : to resell at greatly increased prices ⟨*scalp* theater tickets⟩

intransitive verb

1 : to take scalps

2 : to profit by slight market fluctuations

— scalp·er *noun*

scal·pel \'skal-pəl *also* skal-'pel\ *noun* [Latin *scalpellus, scalpellum*, diminutive of *scalper, scalprum* chisel, knife, from *scalpere* to scratch, carve] (1742)

: a small straight thin-bladed knife used especially in surgery

scalp lock *noun* (1826)

: a long tuft of hair on the crown of the otherwise shaved head especially of a warrior of some American Indian tribes

scaly \'skā-lē\ *adjective* **scal·i·er; -est** (14th century)

1 a : covered with, composed of, or rich in scale or scales **b** : FLAKY

2 : of or relating to scaly animals

3 : DESPICABLE, POOR

4 : infested with scale insects ⟨*scaly* fruit⟩

— scal·i·ness *noun*

scaly anteater *noun* (1840)

: PANGOLIN

scam \'skam\ *noun* [origin unknown] (1963)

: a fraudulent or deceptive act or operation ⟨an insurance *scam*⟩

scam·mo·ny \'ska-mə-nē\ *noun, plural* **-nies** [Middle English *scamonie*, from Old English *scammoniam*, from Latin *scammonia*, from Greek *skammōnia*] (before 12th century)

1 : a twining convolvulus (*Convolvulus scammonia*) of Asia Minor with a large thick root

2 a : the dried root of scammony **b** : a cathartic resin obtained from scammony

¹scamp \'skamp\ *noun* [obsolete *scamp* to roam about idly] (1808)

1 : RASCAL, ROGUE

2 : an impish or playful young person

— scamp·ish \'skam-pish\ *adjective*

²scamp *transitive verb* [origin unknown] (1837)

: to perform or deal with in a hasty, neglectful, or imperfect manner

¹scam·per \'skam-pər\ *intransitive verb* **scam·pered; scam·per·ing** \-p(ə-)riŋ\ [probably from obsolete Dutch *schampen* to flee, from Middle French *escamper*, from Italian *scampare*, from (assumed) Vulgar Latin *excampare* to decamp, from Latin *ex-* + *campus* field] (1691)

: to run nimbly and usually playfully about

²scamper *noun* (1697)

: a playful or hurried run or movement

scam·pi \'skam-pē, 'skäm-\ *noun, plural* **scampi** [Italian, plural of *scampo*, a European lobster] (1925)

: SHRIMP; *especially* : large shrimp prepared with a garlic-flavored sauce

¹scan \'skan\ *verb* **scanned; scan·ning** [Middle English *scannen*, from Late Latin *scandere*, from Latin, to climb; akin to Middle Irish *sceinnid* he springs, Sanskrit *skandati* he leaps] (14th century)

transitive verb

1 : to read or mark so as to show metrical structure

2 : to examine by point-by-point observation or checking: **a** : to investigate thoroughly by checking point by point and often repeatedly ⟨a fire lookout *scanning* the hills with binoculars⟩ **b** : to glance from point to point of often hastily, casually, or in search of a particular item ⟨*scan* the want ads looking for a job⟩

3 a : to examine especially systematically with a sensing device (as a photometer or a beam of radiation) usually to obtain information **b** : to pass an electron beam over and convert (an image) into variations of electrical properties (as voltage) that convey information electronically **c** : to pass over in the formation of an image ⟨the electron beam *scans* the picture tube⟩

intransitive verb

1 : to scan verse

2 : to conform to a metrical pattern

synonym see SCRUTINIZE

— scan·na·ble \'ska-nə-bəl\ *adjective*

²scan *noun* (1706)

1 : the act or process of scanning

2 : a radar or television trace

3 a : a depiction (as a photograph) of the distribution of a radioactive material in something (as a bodily organ) **b** : an image of a bodily part produced (as by computer) by combining radiographic data obtained from several angles or sections

¹scan·dal \'skan-dᵊl\ *noun* [Middle English, from Late Latin *scandalum* stumbling block, offense, from Greek *skandalon* trap, stumbling block, offense; akin to Latin *scandere* to climb] (13th century)