UNITED STATES PATENT AND TRADEMARK OFFICE

BEFORE THE BOARD OF PATENT APPEALS
AND INTERFERENCES

Ex parte MICHELLE CLARE O'CONNELL,
MICHAEL IOANNOU, and IAN O'CONNELL

Appeal 2008-0929
Application 10/344,219
Technology Center 2800

Decided: May 13, 2008

Before LINDA M. GAUDETTE, MICHAEL P. COLAIANNI, and JEFFREY B. ROBERTSON, *Administrative Patent Judges*.

ROBERTSON, *Administrative Patent Judge*.

DECISION ON APPEAL

STATEMENT OF THE CASE

Appellants appeal under 35 U.S.C. § 134(a) (2002) from the Examiner's rejection of claims 19, 27-29, 31, 32, and 37-39[1]. (Examiner's

---

[1] Claims 1-18, 20-26, 30, 35, and 36 have been cancelled. Claims 33 and 34 are objected to as dependent on a rejected base claim. (Appeal Brief filed Dec. 19, 2006, hereinafter "App. Br.," 5).

Answer entered April 2, 2007, hereinafter "Ans.", 3-9). We have jurisdiction pursuant to 35 U.S.C. § 6(b) (2002).

We AFFIRM.

Appellants' claimed invention is directed to a protective cover for a switch or socket, where the cover is attached to a frame through a hinge. (Spec. 3-4). The frame is mounted to a switch or socket box by trapping the frame between a front (face) plate and a wall surface or rear box. (Spec. 5). The frame is held in place by an inwardly-directed lip designed on the rear inner edges of the frame that fits between the plate and the box/wall. (Spec. 7). The plate is secured to the wall through screws that extend through the plate and into the box. (Spec. 6). The cover panel has a latch means for holding the cover panel closed, where the latch means may be a detent, and a matching notched toothed or headed pin. (Spec. 11). The frame contains a slot to allow for a lead of a plug such that the cover may be used with a plug-bearing outlet. (Spec. 6).

Claims 19, 27, 31, 38, and 39 are representative of the subject matter on appeal and recite:

19. A lockable cover, suitable for use with a switch or socket, and for any plug in the socket, of the type wherein an apertured switch or socket plate is mounted by one or more screw-headed bolts in front of a wall having a cavity, within which is mounted a switch- or socket-box which is fully covered by the plate, the cover having:

    a frame configured to extend about a marginal edge of the plate and having an entry slot leading to an opening sized to receive the plate therein without necessitating removal of said one or more screw-headed bolts securing the plate to the box;

    said frame having a lip extending inwardly from a marginal edge of said opening whereby said lip slides behind the plate, and

thus effectively between the plate and the wall to locate the plate in said opening when said one or more screw-headed bolts is partially released, such that, when the plate is secured by said one or more screw-headed bolts to the box, said frame is secured and retained in place by the plate without said one or more screw-headed bolts passing through said frame;

a plug-, switch- or socket-aperture-shrouding cover panel hingedly secured to said frame, and swingable between a closed position, where said cover panel completely covers and encloses the switch or socket and any plug therein, and an open position, where said cover panel is clear from and allows access to the switch or socket and any plug therein;

latch means for holding the cover panel in said closed position; and

release means for enabling release of said latch means.

27. A cover as claimed in Claim 19, wherein said cover panel is spring-loaded towards said open position.

31. A cover as claimed in Claim 19, wherein said latch means comprises a detent and a matching notched, toothed or headed pin, said pin projecting from an inside surface of said cover panel into a hole in said frame to engage said detent in said closed position of said cover panel.

38. In combination a lockable cover and a switch or socket having a rectangular face plate connected by at least one screw-headed bolt to a rectangular mounting box which is fully covered by said face plate, said cover having a frame and a cover panel, said frame extending about three sides of said face plate and having an entry slot adapted to slidably receive said fourth side of said face plate without necessitating removal of said face plate from its connection with said mounting box, said frame being secured by an inwardly directed lip located between said face plate and said mounting box, and said cover panel being hinged to said frame on one side of said face plate for movement between a closed position covering said face plate and an open position allowing access to said face plate, wherein said

cover panel is secured in said closed position by latch means that is self-latching on movement of said cover panel to said closed position and is released by a key to allow movement of said panel to said open position.

39. A method of installing a cover on a switch- or socket-box mounted in a cavity in a wall and having an apertured terminal-carrying switch or socket face plate which fully covers the box releasably secured thereto by one or more screw-headed bolts, comprising the steps of:

providing a lockable cover having a frame defining an open sized to receive the face plate therein and having a lip extending inwardly from a marginal edge of said opening, the lip being adapted to be received between the face plate and the wall, said frame extending about three sides of said face plate and having an entry slot adapted to slidably receive said fourth side of said face plate without necessitating removal of said face plate from its connection with said mounting box,

loosening the one or more screw-headed bolts securing the plate to the box without releasing said face plate from its connection with said mounting box,

sliding said frame between said face plate and said wall so that said lip is received between the face plate and the wall about said three sides of said face plate, and

tightening the one or more screw-headed bolts, whereby said frame is gripped between said face plate and said wall.

The prior art relied upon by the Examiner in rejecting the claims on appeal is:

Baslow	4,163,882	Aug. 7, 1979
Matsuoka	5,000,696	Mar. 19, 1991
Shotey	5,243,135	Sep. 7, 1993
Halvorsen	5,675,126	Oct. 7, 1997
Webster	6,007,353	Dec. 28, 1999

There are four grounds of rejection before us on appeal.

1. Claims 19, 28, 29, 37, and 38 are rejected under 35 U.S.C. § 103(a) as being unpatentable over Shotey in view of Webster and Baslow.
2. Claim 27 is rejected as being unpatentable under 35 U.S.C. § 103(a) over Shotey, Webster, Baslow, and further in view of Matsuoka.
3. Claims 31 and 32 are rejected as being unpatentable under 35 U.S.C. § 103(a) over Shotey, Webster, Baslow, and further in view of Halvorsen.
4. Claim 39 is rejected as being unpatentable under 35 U.S.C. § 103(a) over Webster in view of Baslow.

ISSUE

Have Appellants shown error in the Examiner's determination that the combinations of prior art references would have rendered the subject matter of the claims obvious to one of ordinary skill in the art at the time of the invention?

FINDINGS OF FACT

The record supports the following Findings of Fact (FF) by a preponderance of the evidence.

1. Appellants' Specification recites that the frame contains a slot that may be wide enough to house a plug lead or the slot may be the entire width of the side of the frame "so that the frame becomes a three-sided rather than a four-sided object." (Spec. 6-7).
2. Shotey's Figure 2 is reproduced below:

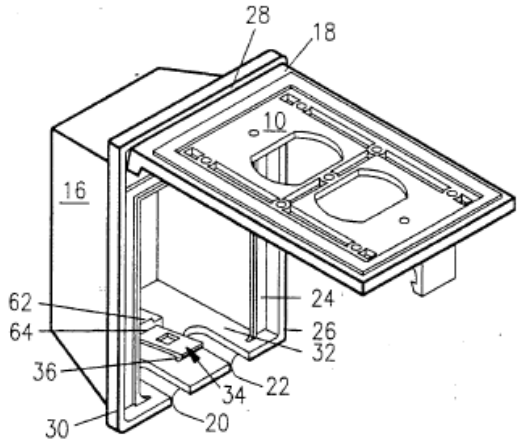

Figure 2 depicts an electrical outlet cover after the cover has been pivoted away from the face plate. Depicted in Figure 2 are a cover (16) with slots (20) and (22); mounting plate (10); seal means (24) that may extend about (26), (28) and (30); bottom side (32) of the cover including a flexible tang (34) with a downwardly depending shoulder (36) and retain end (64); and a receiver (62). (Col. 3, ll. 1-65.)

3. Shotey discloses:

> These outlets are vulnerable to *contamination from dirt, water and other foreign matter*. Moreover, inflow of water or other liquids may pose an electrical hazard unless the electrical outlets are covered or shielded during both use and nonuse. In commercial establishments, such as kitchens, manufacturing facilities, construction sites, and the like, *electrical outlets maybe exposed to liquid chemical compounds, water and/or rain*. To avoid the creation of a hazardous situation giving rise to injury or death from electrical shock, covers for the electrical outlets should be used. (Col. 1, ll. 16-27). (Emphasis added).

4. Webster's Figure 1 is reproduced below:

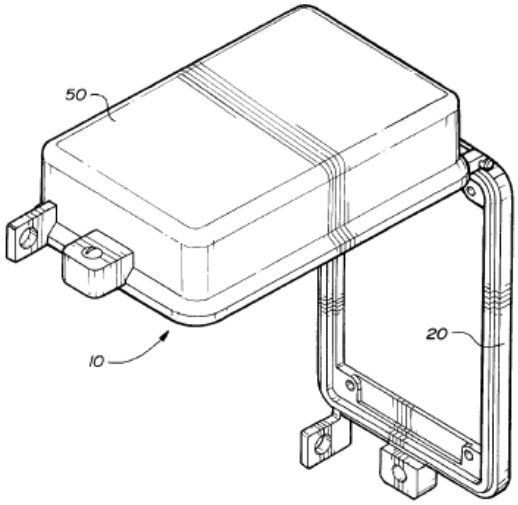

Figure 1 depicts an electrical cover with mounting plate. Depicted in Figure 1 are cover (50), mounting assembly (10), and mounting base (20). (Col. 2, ll. 49-53).

5. Webster discloses:

> Electrical boxes are often situated on programmable logic controllers (PLC), computer numeric control (CNC) machines or other industrial equipment, and thus *are exposed to contamination from dirt, water or other foreign substances* found in an industrial setting. (Col. 1, ll. 15-20).

6. Webster recites:

> Therefore, the "open" design of the present invention allows flexibility for various prepunched configuration [face] plates to be swapped in and out with the same mounting assembly. (Col. 4, ll. 49-52).

7. Baslow's Figure 11 is reproduced below:

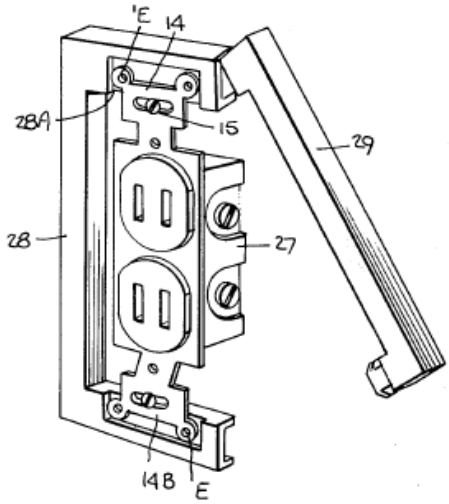

Figure 11 depicts a frame with an entry slot surrounding an electrical outlet. Depicted in Figure 11 are electrical power outlet (27), mounting wings (14) and (14B), C-shaped section (28), bar section (29), shallow recess (28A), primary screws (15), and ears (E) and (E'). (Col. 6, ll. 3-37).

8. The frame in Baslow is used to provide a space between a wall and fabric covering. (Col. 1, ll. 63-67).

9. The frame of Baslow comprises a bar section (29) on one side of the frame, which is hinged to the frame to expose an entry slot to allow for installation of the frame without complete removal of the outlet from the wall. (Col. 6, ll. 12-28).

10. Baslow recites:

> Thus when installing the frame, one first loosens primary screws 15 in order to pull out the outlet to an extent making it possible to interpose the frame between the wings and the region of the wall surrounding the outlet box, the bar 29 being then locked to section 28. The screws are then tightened to press the frame against the wall and hold the outlet in place, after which one attaches a face plate to the outlet. The plate has

> two port holes providing access to the sockets. (Col. 6, ll. 20-28).

PRINCIPLES OF LAW

"Section 103 forbids issuance of a patent when the 'differences between the subject matter sought to be patented and the prior art are such that the subject matter as a whole would have been obvious at the time the invention was made to a person having ordinary skill in the art to which the subject matter pertains.'" *KSR Int'l Co. v. Teleflex, Inc.*, 127 S. Ct. 1727, 1734 (2007). In *KSR,* the Supreme Court explained, "[w]hen a work is available in one field of endeavor, design incentives and other market forces can prompt variations of it, either in the same field or a different one. If a person of ordinary skill can implement a predictable variation, §103 likely bars its patentability." *Id*. at 1740.

Further, the Court emphasized the need to account for common sense when considering whether a combination of references would have been obvious: "[c]ommon sense teaches, however, that familiar items may have obvious uses beyond their primary purposes, and in many cases a person of ordinary skill will be able to fit the teachings of multiple patents together like the pieces of a puzzle." *Id*. at 1742.

The Court also stated:

> The first error of the Court of Appeals in this case was to foreclose this reasoning by holding that courts and patent examiners should look only to the problem the patentee was trying to solve. The Court of Appeals failed to recognize that the problem motivating the patentee may be only one of many addressed by the patent's subject matter. The question is not whether the combination was obvious to the patentee but whether the combination was obvious to a person with ordinary

> skill in the art. Under the correct analysis, any need or problem known in the field of endeavor at the time of invention and addressed by the patent can provide a reason for combining the elements in the manner claimed.

Id. at 1742 (Internal citations omitted).

Regarding the use of hindsight, the Court indicated that a fact finder "must be cautious of arguments reliant upon *ex post* reasoning," but went on to state that "[r]igid preventative rules that deny factfinders recourse to common sense, however, are neither necessary under our case law nor consistent with it." *Id*. at 1742-43.

ANALYSIS

With respect to the first ground of rejection, Appellants present separate arguments as to the following groups of claims: (1) claim 38 and (2) claims 19, 28, 29, and 37. Therefore, we decide the first ground of rejection on the basis of claims 19 and 38. We note that Appellants rely on many of the same arguments for claim 38 as set forth for claim 19. Therefore, we consider all arguments presented with respect to the first ground of rejection to the extent that they apply to limitations in representative claims 19 and 38. In addition, many of the same arguments set forth for the first ground of rejection are relied on in subsequent grounds of rejection. We have considered these arguments to the extent they apply to limitations in any of the claims subject to these subsequent grounds of rejection. 37 C.F.R. § 41.37(c)(1)(vii) (2006).[2]

---

[2] Only those arguments actually made by Appellants have been considered in this decision. Arguments which Appellants could have made but chose

A. The rejection of claims 19, 28, 29, 37, and 38 over Shotey in view of Webster and Baslow.

The Examiner found that Shotey discloses the invention as claimed except for the specific frame. (Ans. 3, FF 2). The Examiner found that Webster teaches a frame similar to the presently claimed frame and concluded it would have been obvious to modify the frame of Shotey as taught by Webster "to provide a secure connection and allow flexibility to use different configuration [face] plates." (Ans. 3, 4). The Examiner stated that the combination of Shotey in view of Webster discloses the claimed invention except for the presence of an entry slot in one side of the frame. (Ans. 4). The Examiner found that Baslow teaches frames with entry slots surrounding electrical outlets. (Ans. 4). The Examiner concluded that it would have been obvious to a person of ordinary skill in the art to modify the cover of Shotey in view of Webster in accordance with the teachings of Baslow in order "to facilitate installation of the frame without removing the plate." (Ans. 4).

Appellants contend that the combination of the cited references does not result in the claimed invention. (App. Br. 13). Appellants argue that the Examiner has provided no logical reason why one of ordinary skill in the art having ordinary creativity would have modified the cited prior art to arrive at Appellants' claimed invention. (Reply Br. 7). Appellants additionally contend that the Examiner relies on hindsight to combine the cited prior art to arrive at the claimed invention. (App. Br. 15, Reply Br. 7).

---

not to make have not been considered and are deemed to be waived. *See* 37 C.F.R. § 41.37 (c)(1)(vii) (2004).

As discussed below, we are of the opinion that the Examiner properly established a *prima facie* case of obviousness for all of the appealed claims consistent with the Supreme Court's decision in *KSR*. We do not find Appellants' arguments persuasive because they place undue focus on explicit elements of the references and the physical combinability of these elements. It is well established that "it is not necessary that the inventions of the references be physically combinable to render obvious the invention under review." *In re Sneed*, 710 F.2d 1544, 1550 (Fed. Cir. 1983). In addition, "[c]ombining the teachings of references does not involve an ability to combine their specific structures." *In re Nievelt*, 482 F.2d 965 (CCPA 1973). Further, the Examiner has provided specific reasons from the references of record why one of ordinary skill would have made the modifications to arrive at the claimed invention. Thus, the Examiner's conclusion does not represent a reliance on hindsight reasoning.

Specifically, Appellants contend that in order to apply the frame of Webster to the cover of Shotey, one of ordinary skill in the art would have passed screws through the frame in order to affix the frame to the box. (App. Br. 14). Appellants additionally argue that Webster does not have an entry slot to allow the frame to slide behind the socket plate. (App. Br. 15). However, these arguments ignore what Baslow would have conveyed to one of ordinary skill in the art. We agree with the Examiner that Baslow teaches a frame with an entry slot that is secured to a socket without passing screws through the frame. (Ans. 9, 10; FF 10). Baslow provides a design incentive, simplified installation, where the frame may be installed without completely removing the cover plate from the outlet. (FF 7, 9). Thus when the prior art

is considered as a whole, we are not persuaded by Appellants' arguments regarding the combination of Shotey in view of Webster and Baslow.

Appellants contend that Shotey and Webster have different purposes such that one of ordinary skill in the art would not consider Webster to solve any face fixing problems perceived in Shotey. (App. Br. 15). We do not find this argument persuasive. First, Shotey and Webster both provide covers for electrical outlets to protect them from dirt, water and other foreign substances. (FF 3, 5). In addition, Webster recognizes the flexibility that the frame provides for use with different cover plates. (FF 4, 6). As stated by the Supreme Court in *KSR*, "any need or problem known in the field of endeavor at the time of the invention and addressed by the patent can provide a reason for combining the elements in the manner claimed." 127 S. Ct. at 1742.

With respect to Baslow, *KSR* instructs that "familiar items may have obvious uses beyond their primary purposes." *Id*. The frame in Baslow is used to provide a space between a wall and fabric covering (FF 8). Therefore, it provides an example of how to affix a frame to an electrical socket without removing the socket itself. (*See* Ans. 8, 10). Thus, we agree with the Examiner that a person of ordinary skill would have recognized that the teachings of Baslow would have been useful to facilitate the installation of similar frames around electrical outlets. (Ans. 10).

Claim 38

Regarding claim 38, Appellants contend that the language "said frame extending about three sides of said face plate and having an entry slot" distinguishes the frame of Baslow, because the claimed frame prohibits the existence of a fourth side. (App. Br. 16, Reply Br. 10). The Examiner

determines that the claim language is open, and allows for the presence of a fourth side. (Ans. 12).

During prosecution, claims are given the broadest reasonable construction "in light of the specification as it would be interpreted by one of ordinary skill in the art." *In re Am. Acad. of Sci. Tech. Ctr.*, 367 F.3d 1359, 1364 (Fed. Cir. 2004). We agree with the Examiner that the claim language allows for the presence of a fourth side to the frame. There is nothing in the Specification that supports Appellants' position that the claim language is closed. The Specification discusses the frame sides in the context of providing a slot in the edge of the frame. (Spec. 6-7). The Specification states that the slot can be wide enough to house a plug lead or it can be the entire width of the side of the frame "so that the frame becomes a three-sided rather than a four-sided object." (FF 1). Therefore, the claim language is open to situations where the slot is less than the full width of the fourth side (a four-sided frame) and situations where the slot is the entire width of the frame (a three-sided frame).

Appellants additionally contend that the devices of Webster and Baslow, if modified as suggested by the Examiner, would not serve their intended purposes. (App. Br. 16, Reply Br. 11). Appellants argue that removal of one of the sides of the frame of Webster would prevent installation of a compression gasket to provide a seal between the frame and the mounting box. (App. Br. 16). We do not find this argument persuasive.

As discussed above, claim 38 is open to the presence of a four-sided frame. In addition, the Examiner concluded that in view of Baslow, it would have been obvious to provide a multi-part gasket in the frame of Webster, while still allowing installation of the frame. (Ans. 14). This conclusion is

undisputed by Appellants. Further, there is no objective evidence of record that the absence of a gasket would render the cover "inoperable for its intended purpose." *See In re Gordon*, 733 F.2d 900, 902 (Fed. Cir. 1984).

For the above reasons, we find that Appellants have failed to show error in the Examiner's § 103 rejection of claims 19 and 38. For the same reasons, we find that Appellants have failed to show error in the Examiner's conclusion of obviousness with respect to claims 28, 29, and 37.

B. The rejection of claim 27 over Shotey, Webster, Baslow, and further in view of Matsuoka.

Appellants traverse the Examiner's rejection of claim 27 on the basis that Matsuoka is non-analogous art. Appellants contend that the "art of designing computer circuitry is an engineering discipline utterly distinct from the art of designing safety accessories for house wiring…." (App. Br. 17). Appellants also argue that Matsuoka is not reasonably pertinent to the particular problems addressed by the invention, which Appellant lists as "(1) Prevent children from tampering with outlets; (2) Prevent unauthorized disconnection of a plugged-in device; and (3) Provide easy access for an authorized person to gain access to the outlets." (Reply Br. 11). The Examiner contends that Matsuoka is pertinent to a problem that Appellants are concerned with, namely, "using a spring to bias the cover towards the open position to facilitate access to the socket…." (Ans. 14).

Determining whether a reference is non-analogous art is a two-fold inquiry. First, we must decide if the reference is within the field of the inventor's endeavor; if it is not, we proceed to determine whether the reference is reasonably pertinent to the particular problem with which the

inventor was involved. *See In re GPAC Inc.*, 57 F.3d 1573, 1577 (Fed. Cir. 1995); *In re Wood*, 599 F.2d 1032, 1036 (CCPA 1979). "A reference is reasonably pertinent if, even though it may be in a different field of endeavor, it is one which, because of the matter with which it deals, logically would have commended itself to an inventor's attention in considering his problem." *In re Clay*, 966 F.2d 656, 659 (Fed. Cir. 1992).

We agree with Appellants that Matsuoka is not from the same field of endeavor as Appellants. However, we find that Matsuoka is reasonably pertinent to Appellants' particular problem. Appellants state that the problem with which they are concerned is to provide easy access to the outlets, problem (3). (Reply Br. 11). Similarly, the Examiner stated, and Appellants do not dispute, that the problem set forth in Matsuoka is to facilitate access to the socket. (Ans. 6). The problem that Appellants acknowledge they are trying to solve is the same problem set forth in Matsuoka. Therefore, Matsuoka would have commended itself to Appellants' attention in considering the access problem in socket coverings. Accordingly, we agree with the Examiner that Matsuoka is analogous art, and Appellants have failed to show error in the rejection of claim 27.

C. The rejection of claims 31 and 32 as being unpatentable over Shotey, Webster, Baslow, and further in view of Halvorsen.

Regarding claim 31, Appellants argue that Halvorsen discloses a variety of alternative latching mechanisms, but fails to teach a latching mechanism as recited in claim 31. (App. Br. 18). Appellants further contend that it would not have been obvious to have combined Halvorsen's latching mechanism with Shotey's latch means of Shotey in a manner that

would create an operable safety cover. (App. Br. 18). We are not persuaded by Appellants' arguments because they fail to address the Examiner's reasoning in rejecting the claims. (Ans. 7, 15). As stated by the Examiner and not contested by Appellants, the only difference between claim 31 and the prior art is the presence of the detent inside the frame. (Ans. 7, 15). Contrary to Appellants' contention, the Examiner's proposed modification of Shoney does not require replacement of Shoney's latching mechanism with Halvorsen's latching mechanism. Rather, the Examiner relies on Halvorsen for a teaching of the advantages associated with forming a detent in the frame. (Ans. 7). Specifically, the Examiner reasoned that it would have been obvious to modify *Shoney's* latching mechanism by locating the detent inside the frame to protect it from the elements, consistent with the teachings of Halvorsen. (Ans. 7). Accordingly, for the above reasons, we find that Appellants have failed to show error in the Examiner's rejection of claim 31. For the same reasons, we find that Appellants have failed to show error in the Examiner's conclusion of obviousness with respect to claim 32.

D. The rejection of claim 39 as being unpatentable over Webster in view of Baslow.

Claim 39 stands rejected over Webster in view of Baslow. The Examiner found that Webster discloses substantially the same claimed invention except for the entry slot in one side of the frame. (Ans. 7, 8). The Examiner additionally found that Baslow teaches a frame with an entry slot allowing for installation by partially removing the screws and sliding the frame behind the face plate without removing the plate. (Ans. 8). The Examiner concluded that it would have been obvious to one of ordinary skill

in the art to form the frame of Webster with an entry slot to facilitate installation of the frame without removing the plate. (Ans. 8, 9).

Appellants present similar arguments as addressed above regarding claim 19. (App. Br. 18-20). Additionally, Appellants contend that the purpose of Baslow is such that there is no suggestion to combine a spacer frame with a cover to conceal the face plate. (App. Br. 19). We agree with the Examiner that Baslow is cited for the purpose of facilitating installation of the frame without removal of the plate, and not for the particular features of Baslow being incorporated into the cover of Webster. (Ans. 16). *See In re Sneed*, 710 F.2d at 1550, *In re Nievelt*, 482 F.2d 965 (CCPA 1973).

Appellants additionally argue that neither Baslow nor Webster teaches or suggests the particular claimed method. (App. Br. 18). However, as detailed by the Examiner in the Answer, the combination of Webster in view of Baslow recites all the limitations of claim 39. (Ans. 8). Specifically, Webster in view of Baslow teaches the structure of the cover as detailed in claim 39. (Ans. 8). Additionally, Baslow teaches loosening of the screws to allow the frame to be placed between the outlet and the wall and then tightening the screws to where the frame is gripped between the socket and the wall. (FF 10). Appellants' arguments do not consider what the combination of references as a whole would convey to one of ordinary skill in the art. Thus, we agree with the Examiner that claim 39 is obvious over Webster in view of Baslow. For the above reasons, we find that Appellants have failed to show error in the Examiner's rejection of claim 39.

CONCLUSION

In light of the above discussion, Appellants failed to demonstrate that the Examiner erred in rejecting claims 19, 28, 29, 37, and 38 under 35 U.S.C. § 103(a) as being unpatentable under 35 U.S.C. § 103(a) over Shotey in view of Webster and Baslow; claim 27 as being unpatentable under 35 U.S.C. § 103(a) over Shotey, Webster, Baslow, and further in view of Matsuoka; claims 31 and 32 as being unpatentable under 35 U.S.C. § 103(a) over Shotey, Webster, Baslow, and further in view of Halvorsen; or claim 39 as being unpatentable under 35 U.S.C. § 103(a) over Webster in view of Baslow.

ORDER

The Decision of the Examiner rejecting claims 19, 27-29, 31, 32, and 37-39 as obvious under 35 U.S.C. § 103(a) is affirmed.

No time period for taking any subsequent action in connection with this appeal may be extended under 37 C.F.R. §1.136(a)(1)(iv).

AFFIRMED

cam

ELMAN TECHNOLOGY LAW. P.C.
P O BOX 209
SWARTHMORE, PA 19081