UNITED STATES PATENT AND TRADEMARK OFFICE

BEFORE THE BOARD OF PATENT APPEALS AND INTERFERENCES

Ex parte
GUSTAVO A. DASCANIO and M. EDMUND ELLION

Appeal 2008-1915
Application 10/830,364
Technology Center 3700

DECIDED: May 29, 2008

Before TONI R. SCHEINER, LORA M. GREEN, and JEFFREY N. FREDMAN, *Administrative Patent Judges*.

SCHEINER, *Administrative Patent Judge*.

DECISION ON APPEAL

Appellants appeal under 35 U.S.C. § 134 from a final rejection of claims 1-4, 7-15, and 17-20.[1] The claims have been variously rejected as anticipated by and/or obvious over the prior art, and as lacking enablement and adequate written descriptive support. We have jurisdiction under 35 U.S.C. § 6(b).

---

[1] Claims 5, 6, and 16 are also pending. Claim 16 has been allowed, and claims 5 and 6 have been objected to as dependent on a rejected base claim (Ans. 13).

DISCUSSION

The present invention is directed to "[a] fluid dispenser closure includ[ing] a tube having a distal end. The tube has a hydrophilic portion and a hydrophobic portion. The hydrophobic portion has an exit orifice at the distal end" (Spec. ¶ 4).

According to Appellants, the fluid dispenser closure is "capable of delivering an accurate volume of liquid" (Spec. ¶ 27) "without moving parts" (*id*.).

Claims 1, 2, and 20 are representative, and read as follows:

1. A fluid dispenser closure comprising a tube including a tubular hydrophilic portion and a tubular hydrophobic portion, the hydrophobic portion having an exit orifice at a distal end of the tube.

2. The closure of claim 1, wherein the closure is designed to dispense a liquid; and wherein the hydrophilic portion has an internal diameter no more than four times a product of liquid surface tension times cosine of contact angle and divided by a product of length of the hydrophilic portion and the density of the liquid.

20. The closure of claim 1, wherein surface tension of the hydrophobic portion alone causes liquid to be retained within the hydrophilic portion when the tube is inverted.

The claims stand rejected as follows:

- Claims 1, 4, 7, 8, and 18 under 35 U.S.C. § 102(e) as anticipated by Branch (U.S. Patent 6,398,766 B1, June 4, 2002).

- Claims 2, 3, 9, 19, and 20 under 35 U.S.C. § 102(e) as anticipated by or, in the alternative, under 35 U.S.C. § 103(a) as obvious over Branch.

- Claims 10-15 under 35 U.S.C. § 103(a) as unpatentable over Branch.

- Claims 2, 3, 15, 17, and 19 under 35 U.S.C. § 112, first paragraph, as lacking enablement.

- Claim 20 under 35 U.S.C. § 112, first paragraph, as lacking adequate written descriptive support.

Anticipation by Branch

The Examiner rejected claims 1, 4, 7, 8, and 18 under 35 U.S.C. § 102(e) as anticipated by Branch.

The Examiner contends that "Branch teaches a fluid dispenser closure comprising a tube including a tubular hydrophilic portion 24 comprised of Tygon tubing" (Ans. 5), "and a tubular hydrophobic portion 110" (Ans. 6). The Examiner contends that "[p]ortion 110 is . . . hydrophobic because said portion 110 is integral with spray nozzle 26, which is in turn of unitary construction with respect to the base member 32 . . . which Branch teaches is comprised of molded ABS plastic or [poly]propylene, both of which are hydrophobic" (Ans. 6). The Examiner further contends that "portion 110 has an exit orifice 118 at a distal end of the tube" (Ans. 6).

Appellant contends that "Branch clearly shows that the sleeve 110 and the supply line 24 are separate elements, that the sleeve 110 is part of a nozzle, and that numeral 118 references an outlet of the nozzle 26, not the supply line tube 24" (App. Br. 7), and in any case, "Branch does not disclose a composition of the inlet sleeve 110, chamber 111 or orifice 118" (*id.*).

Essentially, the issue raised by this appeal is whether there is sufficient evidence to support the Examiner's assertion that Branch's inlet sleeve 110 is made of a hydrophobic material. We find there is not.

For clarity, Branch's Figure 10 is reproduced immediately below:

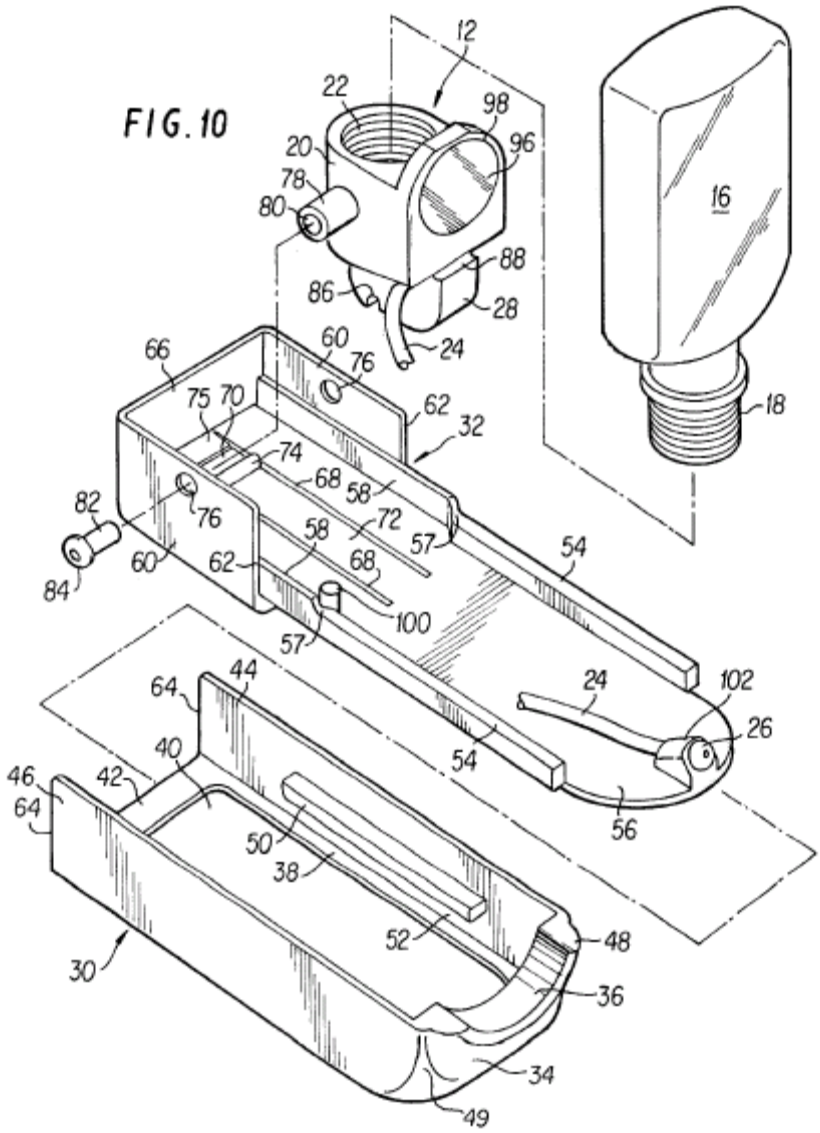

Figure **10** is an exploded view of an eye wash system (Branch, col. 4, l. 3), showing fluid line **24**, nozzle **26**, and base member **32**, among other structures. According to Branch, "liquid is fed from housing **20** through a fluid line **24** to a spray nozzle **26**, from which the liquid is dispensed as a spray into the eye of a user" (Branch, col. 4, ll. 36-38). Slidably mounted second base member **32** and first base member **30** form base assembly **14**,

the external casing of the eye wash system (Branch, col. 4, ll. 48-51). "[S]pray nozzle **26** . . . is mounted on the front end of bottom wall **56** by means of a mounting cowl **102**" (Branch, col. 6, ll. 21-22).

According to Branch, "[c]oupling assembly **12**, base member **30**, and base member **32** are molded of ABS or polypropylene. Squeeze bottle **16** is formed of either high or low density polyethylene . . . [and] [f]luid tube **24** is made of polyvinyl chloride or Tygon tubing" (Branch, col. 7, ll. 4-8).

Branch's Figures **11** and **12** show the structure of the spray nozzle in greater detail, and are reproduced immediately below:

FIG. 11

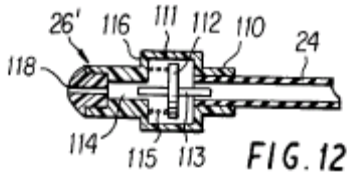

FIG. 12

Figure **11** is a perspective view of metering spray nozzle **26´**. Figure **12** is a section diagram illustrating the internal construction of spray nozzle **26´** (Branch, col. 4, ll. 5-9). "Nozzle **26´** has an inlet sleeve **110** and fluid line **24** is inserted in sleeve **110** and affixed therein by a suitable adhesive" (Branch, col. 6, ll. 41-43).

As discussed above, Branch teaches that base member **32** is molded of ABS or polypropylene (which the Examiner asserts are hydrophobic), but does not specify any particular materials for inlet sleeve **110**, or for nozzles

26 or **26´**. While inlet sleeve **110** is a component of spray nozzle **26**, and "spray nozzle **26** . . . is mounted on the front end of bottom wall **56** [of base member **32**] by means of a mounting cowl **102**" (Branch, col. 6, ll. 21-22), we see no factual basis for the Examiner's assertion that inlet sleeve **110** is made of the same material as base member **32** (i.e, ABS plastic or [poly]propylene). Therefore, we find that the Examiner has not established that Branch describes a fluid dispenser closure comprising a tubular hydrophilic portion and a tubular hydrophobic portion, where the hydrophobic portion has an exit orifice at a distal end of the tube, as required by the claims on appeal.

Accordingly, the rejection of claims 1, 4, 7, 8, and 18 as anticipated by Branch is reversed.

Other Rejections over Branch

The Examiner also rejected claims 2, 3, 9, 19, and 20 under 35 U.S.C. § 102(e) as anticipated by or, in the alternative, under 35 U.S.C. § 103(a) as obvious over Branch, and claims 10-15 under 35 U.S.C. § 103(a) as unpatentable over Branch.

Neither rejection addresses the underlying deficiency in Branch's teachings.

Accordingly, both of these rejections are reversed as well.

Scope of Enablement

Claims 2, 3, 15, 17, and 19 stand rejected under 35 U.S.C. § 112, first paragraph, "because the specification, while being enabling for a hydrophilic portion having a certain internal diameter, does not reasonably provide enablement for a hydrophilic diameter no more than four times (claims 2, 3) or eight times (claims 15, 17, 19) the product of the liquid surface tension

times the cosine of the contact angle, divided by the product of the length of said hydrophilic portion and the density of the liquid dispensed" (Ans. 3).

"[A] specification disclosure which contains a teaching of the manner and process of making and using the invention in terms which correspond in scope to those used in describing and defining the subject matter sought to be patented *must* be taken as in compliance with the enabling requirement of the first paragraph of § 112 *unless* there is reason to doubt the objective truth of the statements contained therein which must be relied on for enabling support." *In re Marzocchi*, 439 F.2d 220, 223 (CCPA 1971). "[I]t is incumbent upon the Patent Office . . . to explain why it doubts the truth or accuracy of any statement in a supporting disclosure and to back up assertions of its own with acceptable evidence or reasoning which is inconsistent with the contested statement." *Id.* at 224.

In a nutshell, the Examiner argues that "[t]he disclosure as written causes undue experimentation to one of ordinary skill in the art to make or use the invention, as a specific fluid or fluids (and thus a range for surface tension value) is/are neither claimed nor clearly disclosed" (Ans. 4). The Examiner argues that "[c]laims merely setting forth physical characteristics desired in [an] article, and not setting forth specific compositions which would meet such characteristics, are invalid" (Ans. 4).

Appellants point out that "[t]he Specification provides examples of [suitable] fluids in paragraph 29" (Br. 15), and also "describe[s] balance-of-forces in terms of internal tube diameter (D), liquid density (d), of the tube . . . , liquid surface tension (s), contact angle (θ) and Height to which the liquid will rise" (*id.*). We agree with Appellants that "[t]his provides enablement for a range of liquids" (*id.*).

We find that the Examiner has not established that practicing the full scope of the claims would have required undue experimentation. Given the guidance and direction set forth in the Specification (particularly the equations and sample liquids set forth in ¶¶ 29-31), determining an appropriate internal diameter for a tube for use with virtually any fluid would appear to require nothing more than routine experimentation. In any case, it is well settled that Appellants "are not required to disclose every species encompassed by their claims even in an unpredictable art." *In re Angstadt*, 537 F.2d 498, 503 (CCPA 1976).

The rejection of claims 2, 3, 15, 17, and 19 under 35 U.S.C. § 112, first paragraph, for lack of enablement is reversed.

Written Description

Claim 20 stands rejected under 35 U.S.C. § 112, first paragraph, as lacking adequate written descriptive support.

According to the Examiner, the Specification "states that it is the surface tension of the liquid itself as well as the equal and added surface tension at the bottom of the tube 10 that retains the liquid. Thus the hydrophobic portion . . . does not, and cannot, alone retain the liquid within the hydrophilic portion" (Ans. 5).

The written description requirement is satisfied when the specification "set[s] forth enough detail to allow a person of ordinary skill in the art to understand what is claimed and to recognize that the inventor invented what is claimed." *University of Rochester v. G.D. Searle & Co., Inc.*, 358 F.3d 916, 928 (Fed. Cir. 2004).

It is clear from the Specification that liquid is retained in the liquid dispenser by the "balance-of-forces" described in ¶¶ 29-31 of the

Specification, and that, all other things being equal, liquid "would flow out of the hydrophilic portion **44a** until the pressure in the container decrease[d] an amount sufficient to create a vacuum" (Spec. ¶ 34), were it not for "the hydrophobic portion **44b** . . . located at the distal end of the dispensing tube **44**" (*id.*).

We find that the Specification sets forth enough detail to allow a person of ordinary skill in the art to understand what is claimed and to recognize that the inventor invented what is claimed. *Rochester*, 358 F.3d at 928. The rejection of claim 20 as lacking adequate written descriptive support is reversed.

SUMMARY

We reverse the Examiner's rejections of the claims under 35 U.S.C. §§ 102(e), 103, and 112, first paragraph.

REVERSED

clj

HUGH P. GORTLER
23 ARRIVO DRIVE
MISSION VIEJO, CA 92692