UNITED STATES PATENT AND TRADEMARK OFFICE

BEFORE THE BOARD OF PATENT APPEALS
AND INTERFERENCES

Ex parte DENNIS E. FERGUSON,
Appellant

Appeal 2008-3553
Application 10/356,045[1]
Technology Center 1700

Decided: July 1, 2008

Before ADRIENE LEPIANE HANLON, ROMULO H. DELMENDO, and MARK NAGUMO, *Administrative Patent Judges*.

NAGUMO, *Administrative Patent Judge*.

DECISION ON APPEAL

---

[1] Application 10/356,045 filed 31 January 2003, titled *Flow Field*, and cited as ("Spec."). The real party in interest is listed as 3M Co. and 3M Innovative Properties Co. (Appeal Brief filed 20 July 2007 ("Br."), at 2.)

A. Introduction

Dennis E. Ferguson ("Ferguson") appeals from the final rejection of claims 1-12 under 35 U.S.C. § 102(e) in view of Gibb.[2, 3] There are no other pending claims. We AFFIRM-IN-PART.

The subject matter on appeal relates to a flow field assembly that is designed to deliver fluid fuels to fuel cells. The assembly is said to improve manufacturability while maintaining good electrical contact area.

The Claimed Subject Matter

Ferguson has argued for the patentability of its claims solely on the basis of Claim 1, which reads as follows:

Claim 1

> An article comprising a flow field which comprises one or more channels,
>
> said article comprising
>
> > an active portion which is the portion of said article bearing said flow field,
>
> wherein said active portion has
>
> > a geometric center and an outer periphery,
>
> wherein said active portion comprises
>
> > a first subsection including said geometric center and excluding said outer periphery,
>
> wherein said active portion comprises
>
> > a second subsection excluding said geometric center and

[2] Peter R. Gibb, *et al.*, *Flow Field Plate Assembly for an Electrochemical Fuel Cell*, U.S. Patent 6,783,884 B2, 31 August 2004, based on application 10/122,048, filed 12 April 2002.

[3] Examiner's Answer mailed 13 September 2007 ("Ans.") at 3.

including said outer periphery,

wherein channels within said first subsection have a first cross-sectional profile,

wherein channels within said second subsection have a second cross-sectional profile, and

wherein said first cross-sectional profile differs from said second cross-sectional profile.

(Claims App., Br. 6; paragraphing added.)

Claims 2-4, 8, 9, and 12[4] depend from claim 1.

Claim 1 covers an article comprising a flow field. The portion of the article that holds the flow field is called the "active portion." The active portion comprises two subsections. The first subsection includes the geometric center of the flow field and excludes the periphery of the flow field. The second subsection excludes the geometric center of the flow field and includes the periphery of the flow field. The claimed subject matter is open to additional portions between the center portion and the peripheral portion, but, however defined, the first subsection does not occupy any portion of the second subsection, and vice-versa. The claim further specifies that the channel (or channels) in the first subsection have a different cross-sectional profile than the channels in the second subsection.

Independent Claims 5 and 6 involve the "draft" of a channel. In Ferguson's words, "'draft' means, with regard to one or both of the walls of a differential segment of a channel in a plate, the smallest angle between a line orthogonal to the plane of the plate's top surface and a line tangent to

[4] Claim 12 is a multiply dependent claim that depends from each of claims 1 through 11. (Claims App., Br. 7.)

the channel wall(s) at a point having a depth beneath the plate's top surface that is half the maximum depth of the channel." (Spec. 3:10-13.)

Independent claim 5 reads:

Claim 5

> An article comprising a flow field which comprises one or more channels, wherein said flow field comprises at least two channel segments which differ in draft.

(Claims App., Br. 6.)

Claims 10, 11, and 12 depend from claim 5. Claim 10 adds the limitation expressed in claim 6 (discussed next), while claim 11, which depends from claim 10, adds the limitations expressed in claim 1.

Independent claim 6 reads:

Claim 6

> An article comprising a flow field which comprises one or more channels, wherein said flow field comprises at least one channel segment comprising first and second channel walls wherein said first and second channel walls differ in draft.

(Claims App., Br. 7.)

Claims 6, 7, and 12 depend from claim 6. Claim 7 adds the limitations expressed in claim 1.

Claim 12 covers a fuel cell comprising an article according to any of claims 1-11.

Gibb

Gibb teaches electrochemical fuel cells having particular flow field plate assemblies comprising two flow field plates.

{Gibb Figure 3 is shown below:}[5]

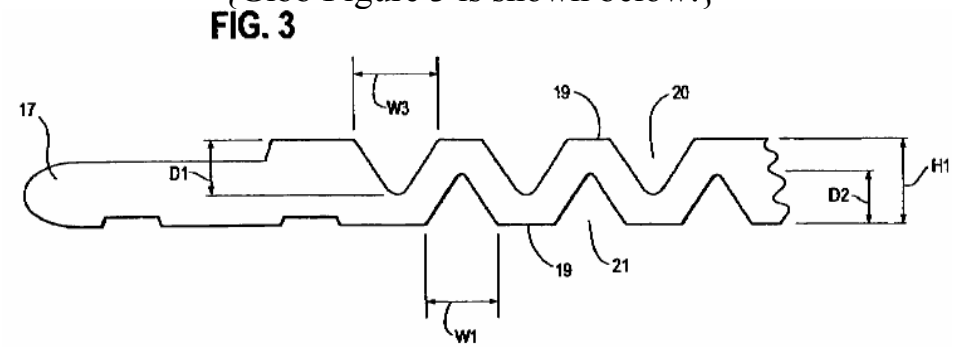

{Gibb Figure 3 is said to show a first flow field plate}

According to Gibb, a first flow field plate **17** is provided with landings **19** that separate outer channels **20** and inner channels **21**. (Gibb 4:47-50.) The outer channels **20** are said to have a depth D_1 and a width W_3 at the surface of the plate. (*Id.* at 4:50-52.) Similarly, inner channels **21** are said to have a depth D_2 and a width W_1 at the surface of the plate. (*Id.* at 4:52-53.) Although in Figure 3, $D_1 = D_2$ and $W_1 = W_3$, in general, according to Gibb, "[t]he channel dimensions can be different from one another ($W_1 \neq W_3$ and $D_1 \neq D_2$) and the width W_1 can vary from one inner channel to another." (*Id.* at 4:56-58.) Gibb also teaches that "the width W_3 can be different from one inner channel to another." (*Id.* at 4:8-9.)

[5] The text in curly braces before and after the Figure is provided to ensure compliance with section 508 of the U.S. Rehabilitation Act for publication of this Decision on the USPTO website pursuant to the Freedom of Information Act. It is not part of the Decision.

Gibb teaches that the flow field plate **17** of Figure 3 is mated with a flow field plate **18** shown in Figure 4, to form an assembly **16** shown in Figure 5. (Gibb 5:17-24.)

{Gibb Figure 4 is shown below:}

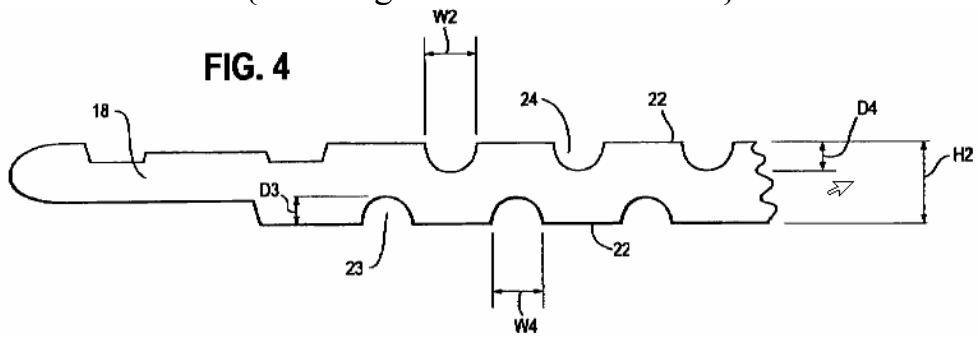

{Gibb Figure 4 is said to show a second flow field plate}

Gibb shows that second flow field plate **18** is provided with landings **22** that separate open outer channels **23** and open inner channels **24**. Channels **23** have a width W_4 at the surface of plate **18**, and a depth D_3. (Gibb 5:1-3.) Channels **24** have a width W_2 at the surface of plate **18**, and a depth D_4. (*Id.* at 5:3-5) The width of channels **24** is less than the widths of channels **21**, i.e., $W_2 < W_1$. (*Id.* at 4:65-5:5.) The widths of channels **23** and **24** can be the same or different. (*Id.* at 5:5-8.) Flow channels **23** are said preferably to have a semicircular cross section. (*Id.* at 5:15-16.) Although not described in words, flow channels **24** are shown in Figures 4 and 5 as having semicircular cross sections.

{Gibb Figure 5 is shown below:}

FIG. 5

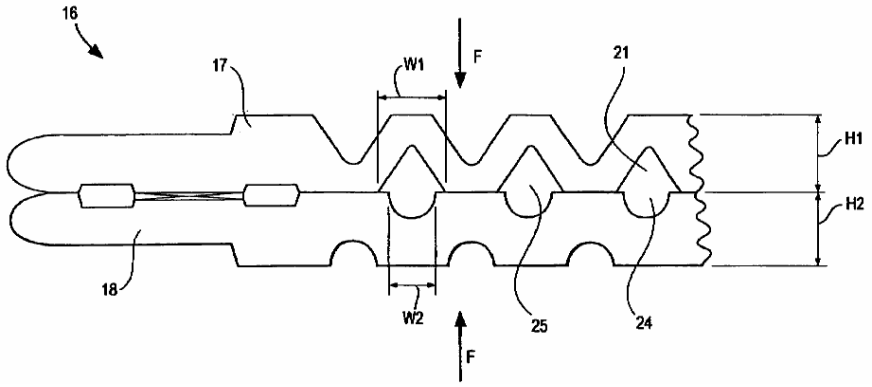

{Gibb Figure 5 is said to show a flow field plate assembly}

Gibb instructs that the inner channels **21** of plate **17** combine with inner channels **24** of the second flow field plate **18,** shown in Figure 4, to form closed channels **25** shown in Figure 5, which are said to carry coolant. (*Id.* at 5:25-34.)

Gibb instructs further that outer channels **20** of plate **17** carry oxidant (e.g., oxygen) to the fuel cell cathode. (Gibb 4:61-64.) Similarly, outer channels **23** of plate **18** are described as carrying fuel (e.g., hydrogen or methanol) to the fuel cell anode (*id.* at 5:12-15.) (The geometry of the fuel cell is illustrated in Gibb Figure 1, which shows the repeating unit of a stack of fuel cells.)

C. Discussion

To anticipate a claim, a prior art reference must disclose every limitation of the claimed invention, either explicitly or inherently. *In re Schreiber*, 128 F.3d 1473, 1477 (Fed. Cir. 1997) (citation omitted).

The Examiner finds that Gibb Figures 3-5 and the associated text at column 4, lines 47-58 describe embodiments that anticipate the claimed

subject matter. (Ans. 2-3.) Ferguson responds that Gibb does not teach or suggest any difference between the center and the periphery of the flow field, and that the rejection of claims 1-12 under 35 U.S.C. § 102(e) "as purportedly anticipated by Gibb should be reversed." (Br. 4-5.)

The Examiner has not directed our attention to any credible evidence supporting the rejection of the subject matter of claim 1. The Gibb "inner" channels do not include the geometric center of the flow field and exclude the periphery; nor do the Gibb "outer" channels exclude the geometric center of the flow field and include the periphery. Rather, the Gibb "inner" channels supply coolant throughout the flow field plate assembly, while the Gibb "outer" channels supply fuel and oxidizer to the anode and cathode of the fuel cell, respectively. Although Gibb does teach that inner channel **21** widths W_1 and outer channel **23** widths W_3 can vary from one channel to another (Gibb at 4:56-58 and 5:8-10), the Examiner has not directed our attention to any credible evidence that these variations occur in such a way that the center of the flow field has channels having a first cross sectional profile and the periphery has channels that have a different cross sectional profile. To the extent the Examiner may be relying on a theory of inherency, we note that our reviewing court has held that "Inherency, however, may not be established by probabilities or possibilities. The mere fact that a certain thing may result from a given set of circumstances is not sufficient." *In re Oelrich*, 666 F.2d 578, 581 (CCPA 1981) (citations omitted). On this record, Ferguson has shown that the Examiner's rejection fails as to claim 1 because the Gibb flow fields do not define a first subsection that includes the geometric center while excluding the periphery; nor do the Gibb flow fields define a second subsection that includes the periphery while excluding the

geometric center, wherein channels in the first subsection have a different cross section than channels in the second subsection.

Accordingly, the rejection of claims 1-4, 8, 9, and 12 as dependent on each of these claims, is REVERSED.

Ferguson has not argued the patentability of claims 5 and 6 separately, but implies that they must stand or fall with claim 1. (Br. 5, quoted *supra*.) We observe, however, that claims 5 and 6 do not limit the article in the manner of claim 1. Claim 5 requires that a flow field comprising one or more channels have at least two channel segments that differ in draft. Gibb describes embodiments in which the width W_1 of channels **21** "vary from one inner channel to another." (Gibb 4:56-58.) The difference in W_1, at constant depth D_2, results in a different draft—the angle between the line orthogonal to the plane of the plate's top surface and the tangent to the wall at half the maximum depth of the channel—because the angle of the V-shaped cross section of the channel changes. Accordingly, Claim 5 reads on these embodiments.

Similarly, Claim 6 requires that a flow field comprising one or more channels have at least one channel segment having first and second channel walls that differ in draft. In the embodiment shown in Gibb Figure 5, the walls of channel **25** comprise the walls of channels **21**, which are planar, and which do not meet at right angles, and the walls of channels **24**, which are circular segments. Clearly, the drafts of the two walls differ. Accordingly, the article of claim 6 is anticipated by the article shown in Gibb Figure 5.

Claim 10 depends from claim 5 and includes the limitations of claim 6. Accordingly, the articles depicted in Figure 5 and described by

Gibb as having varying widths W_1 in the cooling channels **21** anticipate the subject matter of claim 10.

However, claim 7, which depends on claim 6, and claim 11, which depends on claim 5 via claim 10, recite the same limitations as to the center and periphery of the flow field that are recited in claim 1. Accordingly, Ferguson's arguments for the patentability of claim 1 over Gibb apply with equal force to the patentability of claims 7 and 11 over Gibb, and the rejection of claims 7 and 11 is REVERSED.

Ferguson has not argued separately the patentability of claim 12, drawn to fuel cells comprising the articles defined by each of claims 1-11. Accordingly, each version of claim 12 stands or falls with the claim from which it depends.

D. Summary

In view of the record and the foregoing considerations, it is:

ORDERED that the rejection of claims 1-4, 7-9, 11, and 12 (as dependent on each of the cited claims) under 35 U.S.C. § 102(e) in view of Gibb is REVERSED;

FURTHER ORDERED that the rejection of claims 5, 6, 10, and 12 (as dependent on each of the cited claims) under 35 U.S.C. § 102(e) in view of Gibb is AFFIRMED; and

FURTHER ORDERED that no time period for taking any subsequent action in connection with this appeal may be extended under 37 C.F.R. § 1.136(a).

AFFIRMED-IN-PART

sd

3M INNOVATIVE PROPERTIES COMPANY
P. O. Box 33427
St. Paul, MN 55133-3427