UNITED STATES PATENT AND TRADEMARK OFFICE

BEFORE THE BOARD OF PATENT APPEALS
AND INTERFERENCES

Ex parte SAM WAH LAM
and THOMAS MICHAEL McGRATH

Appeal 2008-3594
Application 10/143,076
Technology Center 1700

Decided: July 16, 2008

Before ADRIENE LEPIANE HANLON, CAROL A. SPIEGEL, and CATHERINE Q. TIMM, *Administrative Patent Judges*.

HANLON, *Administrative Patent Judge*.

DECISION ON APPEAL

A. STATEMENT OF THE CASE

This is an appeal under 35 U.S.C. § 134 from an Examiner's final rejection of claims 13, 15, and 16, all of the claims pending in the application. We have jurisdiction under 35 U.S.C. § 6(b). We AFFIRM.

The Examiner finally rejected claim 13 under 35 U.S.C. § 103(a) as being unpatentable over the combined teachings of Park et al.,[1] Healy et al.,[2] and Cook et al.[3] Final Office Action mailed October 3, 2006, at 2; Office Action mailed April 17, 2006, at 2-7.

The Examiner finally rejected claims 15 and 16 under 35 U.S.C. § 103(a) as being unpatentable over the combined teachings of Park, Healy, Cook, and Roselle.[4] Final Office Action mailed October 3, 2006, at 2; Office Action mailed April 17, 2006, at 7-9.

B. ISSUES

Whether the Appellants have shown that the Examiner reversibly erred in rejecting claim 13 under 35 U.S.C. § 103(a) as being unpatentable over the combined teachings of Park, Healy, and Cook.

Whether the Appellants have shown that the Examiner reversibly erred in rejecting claims 15 and 16 under 35 U.S.C. § 103(a) as being unpatentable over the combined teachings of Park, Healy, Cook, and Roselle.

C. FINDINGS OF FACT

The following findings of fact are believed to be supported by a preponderance of the evidence. Additional findings of fact as necessary appear in the Analysis portion of the opinion.

---

[1] US 5,336,434 issued to Park et al. on August 9, 1994 ("Park").
[2] US 6,066,374 issued to Healy et al. on May 23, 2000 ("Healy").
[3] US 6,465,062 B2 issued to Cook et al. on October 15, 2002 ("Cook").
[4] US 5,226,538 issued to Roselle on July 13, 1993.

1. Appellants' Specification

The Appellants' invention is directed to a bottle for protecting sterile liquid ophthalmic products from light degradation while permitting visual examination of the bottle contents. Spec. 1:4-9.

According to the Appellants' Specification, ophthalmic formulations containing Purite® (stabilized chlorine dioxide) peroxide compounds combined with a source of chlorine ions, hydrogen peroxide or perborate are light sensitive. Spec. 1:13-17.

The Appellants disclose that a bottle in accordance with the disclosed invention provides product protection/integrity and identification for an ophthalmic formulation including chlorine dioxide. Spec. 2:6-8.

The Appellants use the term "chlorine dioxide" to refer generally to chlorine dioxide, chlorine dioxide precursors such as Purite® (stabilized chlorine dioxide) or hydrogen peroxide, perborate or other peroxide compounds with a source of chlorine ions. Spec. 2:8-12.

The Appellants' invention includes a bottle formed from a polyethylene terephthalate resin with a first set of dyestuffs in an amount sufficient to absorb visual and ultraviolet wavelengths less than about 420 nm. The blockage, or absorption, of these wavelengths is said to prevent degradation of the chlorine dioxide. Spec. 2:15-21.

The bottle also includes a second set of dyestuffs in an amount sufficient to significantly absorb visual wavelengths greater than about 500 nm. Spec. 2:23-25.

The first and second dyestuffs are said to allow transmission of visual blue wavelengths that enable visual inspection of the product contained in

the bottle and provide a product identifying color to the bottle. Spec. 2:25-29.

2. Claimed invention

Claim 13, the only independent claim on appeal, reads as follows:

> An ophthalmic product comprising:
> a liquid ophthalmic formulation degrading upon exposure to light of wavelength up to about 420nm, said formulation comprising chlorine dioxide;
> a relatively flat sided dropwise dispensing squeeze bottle for containing the formulation, said bottle being formed from a polyethylene terephalate [sic, terephthalate] resin absorbing ultraviolet light at wavelengths below about 312 nm, said bottle having a minimum wall thickness of between about 0.5 mm and about 2 mm and a volume of between about 5 cc and 15 cc;
> first dyestuffs present in said bottle for absorbing visible and ultraviolet light wavelengths between about 312nm, and about 420nm, the combination of first dyestuffs and bottle resin reducing degradation of said formulation by light of wavelength up to about 420 nm; and
> second dyestuffs present in said bottle absorbing most visible wavelengths greater than about 500nm said first and second dyestuffs being present in amounts providing a product identifying blue color to said bottle while at the same time enabling visual inspection of the formulation through the bottle.

3. Park

Park discloses a bottle made of any suitable polymeric material, such as polyethylene terephthalate. Park 10:4-13. Park Figure 2 is illustrative and is reproduced below:

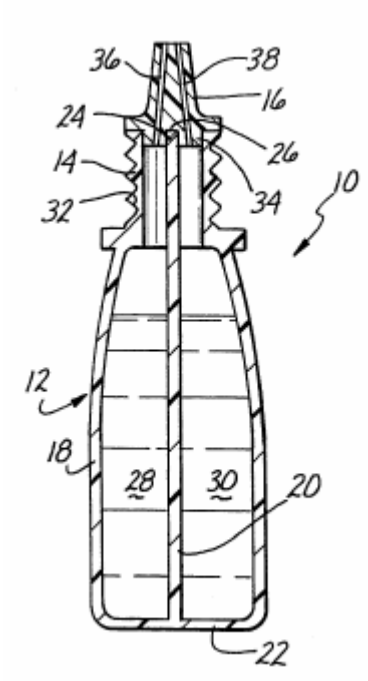

Park Figure 2 depicts a bottle.

The container body **12** of the bottle is comprised of first and second containers **28** and **30**. The first container **28** is filled with a buffered saline solution containing about 0.005% (w/v) of a stabilized chlorine dioxide product. The second container **30** is filled with a buffered saline solution containing about 0.005% (w/v) of sodium thiosulfate. Park discloses that the container body **12** should be constructed so as to be squeezable by application of manual force to urge liquid from the first and second containers **28** and **30** out of the bottle **10** through first and second outlet conduits **36** and **38**, respectively. Park 10:14-32.

4. <u>Healy</u>

Healy discloses a transparent, light resistant container including a generally transparent wall structure of a predetermined thickness that permits visual inspection of medicinal agents stored in the container and inhibits transmission through the wall structure of light of a selected

wavelength that could be detrimental to the medicinal agents stored in the container. Healy 1:10-16.

The invention of Healy also relates to a resin used in forming the container that has dispersed therein a coloring agent and an ultraviolet light radiation absorber that in combination, and correlated with the thickness of the wall structure, function to preclude entry of undesirable light rays into the container while at the same time allowing visual observation of the contents of the container. Healy 1:16-23.

The container has a wall structure with a desirable colored appearance that permits transmission through the wall structure of no more than 10% of light having a wavelength between about 290 nm to 450 nm. Healy 2:63-67.

The container is formed from a composition such as polyethylene terephthalate. Healy 3:12-17.

5. Cook

Cook discloses a container constructed from a multi-layered wall material. Cook 2:53-56.

Cook discloses that the container may be configured as a bottle for a liquid product. Cook 2:29-30.

Cook discloses that the multi-layered material contains a dye selected to protect light-sensitive contents of the container from environmental light. Cook 1:6-10.

Cook discloses that titanium dioxide effectively reflects light having a wavelength above approximately 500 nm. Cook also discloses that some light having a wavelength below 500 nm is reflected when the container wall contains relatively high amounts of titanium dioxide. Cook 1:59-64.

Cook discloses that the amount of titanium dioxide and other colorants can be varied depending upon the desired light barrier characteristics of the multi-layered material. Cook 4:59-62.

Cook discloses that the desired light barrier characteristics of a container should be determined based on the light sensitivity of the product contained therein as well as the amount and type of light that the product will be exposed during manufacturing, storage, and sales display of the product. Cook 6:49-55.

D. PRINCIPLES OF LAW

A claimed invention is not patentable if the subject matter of the invention would have been obvious to a person having ordinary skill in the art at the time the invention was made. 35 U.S.C. § 103(a); *KSR Int'l Co. v. Teleflex Inc.*, 127 S. Ct. 1727 (2007); *Graham v. John Deere Co. of Kansas City*, 383 U.S. 1 (1966).

Facts relevant to a determination of obviousness include (1) the scope and content of the prior art, (2) any differences between the claimed invention and the prior art, (3) the level of skill in the art, and (4) any relevant objective evidence of obviousness or non-obviousness. *KSR*, 127 S. Ct. at 1734; *Graham*, 383 U.S. at 17-18.

One of ordinary skill in the art is presumed to have skills apart from what the prior art references expressly disclose. *See In re Sovish*, 769 F.2d 738, 743 (Fed. Cir. 1985). "A person of ordinary skill is also a person of ordinary creativity, not an automaton." *KSR*, 127 S. Ct. at 1742.

The question under 35 U.S.C. § 103 is not merely what the references teach but what they would have suggested to one of ordinary skill in the art

at the time the invention was made. All disclosures of the prior art must be considered. *In re Lamberti*, 545 F.2d 747, 750 (CCPA 1976).

Where a rejection is based on a combination of references, one cannot show non-obviousness by attacking the references individually. *In re Keller*, 642 F.2d 413, 426 (CCPA 1981).

E. ANALYSIS

1. Claim construction

Claim 13 recites an ophthalmic product comprising a liquid ophthalmic formulation comprising chlorine dioxide.

According to the Appellants' Specification:

> A container in accordance with the present invention provides product protection/integrity and identification for an ophthalmic formulation including chlorine dioxide, or precursors to chlorine dioxide such as, for example, Purite® (stabilized chlorine dioxide) or hydrogen peroxide, perborate or other peroxide compounds with a source of chlorine ions, hereinafter generally referred to as chlorine dioxide.

Spec. 2:6-12; *see also* Spec. 5:10-12 ("Chlorine dioxide as used in the present application includes precursors to chlorine dioxide such as, for example, Purite®.").

In light of the intrinsic evidence, we interpret "chlorine dioxide" as recited in claim 13 to include chlorine dioxide, precursors to chlorine dioxide, such as stabilized chlorine dioxide, or hydrogen peroxide, perborate or other peroxide compounds with a source of chlorine ions. *See In re Zletz*, 893 F.2d 319, 321 (Fed. Cir. 1989) ("During patent examination the pending claims must be interpreted as broadly as their terms reasonably allow.").

2. Rejection under 35 U.S.C. § 103(a)

The Examiner found that Park discloses an ophthalmic product consisting of a liquid ophthalmic formulation that comprises a precursor to chlorine dioxide.[5] The Examiner found that the ophthalmic product is contained in a bottle formed from a resin such as polyethylene terephthalate. Ans. 3-4.[6]

The Examiner found:

> Park et al. fail to teach that the resin absorbs ultraviolet light at wavelengths below about 312nm, that the bottle comprises first dyestuffs for absorbing visible and ultraviolet light wavelengths between about 312nm and about 420nm (where the combination of the first dyestuffs and the bottle resin reduces degradation of the formulation by light of wavelength up to about 420nm), that the bottle comprises second dyestuffs for absorbing most visible wavelengths greater than about 500nm and fail to explicitly teach the claimed wall thickness and volume ranges.

Ans. 4.

The Examiner found that Healy discloses a container for storing medicinal agents that is formed from a synthetic resin such as polyethylene terephthalate. The Examiner found that the container includes an ultraviolet light absorber that absorbs light at wavelengths below about 312 nm and a coloring agent, or first dyestuffs, for absorbing visible and ultraviolet light at wavelengths between about 312 nm and about 420 nm. The Examiner found that Healy discloses that the amounts of the ultraviolet light absorber and the coloring agent are correlated with the thickness of the container wall to

---

[5] Park discloses that stabilized chlorine dioxide is a preferred chlorine dioxide precursor. Park 2:35-38.
[6] Examiner's Answer mailed October 2, 2007.

cooperatively inhibit transmission of light having a wavelength between about 290 nm and 450 nm through the container wall. Ans. 4.

The Examiner further found that Cook discloses a multilayered container for a light sensitive liquid product such as a medical product. The Examiner found that Cook discloses that titanium dioxide is included in at least one of the layers of the multilayered container and reflects light having a wavelength above approximately 500 nm. Ans. 5.

The Examiner concluded that it would have been obvious to one of ordinary skill in the art to modify the bottle composition of Park to include an ultraviolet light absorber and first dyestuffs as in Healy and titanium dioxide as in Cook to block harmful wavelengths of light while also allowing visual inspection of the product contained in the bottle. Ans. 5-6.

The Appellants argue that Park does not teach or suggest the combination of a liquid ophthalmic formulation comprising chlorine dioxide and a bottle. Rather, the Appellants argue that a precursor of chlorine dioxide is stored in the bottle of Park. Br.5.[7]

As discussed above, interpreting claim 13 as broadly as its terms reasonably allow, we interpret "chlorine dioxide" to include a precursor of chlorine dioxide as disclosed in Park. *See* Spec. 2:6-12, 5:10-12.

Next, the Appellants argue there is no motivation to provide dyestuffs in the bottle of Park. The Appellants argue that Park prevents degradation of chlorine dioxide by separately storing sodium dioxide precursors, and thus, eliminates the need for providing light absorbing dyestuffs in the bottle. Br. 6.

---

[7] Appeal Brief dated July 6, 2007.

The evidence of record establishes that stabilized chlorine dioxide is known to be light sensitive. *See* Spec. 1:13-17. Park discloses that stabilized chlorine dioxide is stored in a first container **28** and sodium thiosulfate is stored in a second container **30**. The Appellants have failed to direct us to any portion of Park, or any other evidence for that matter, demonstrating that light degradation of stabilized chlorine dioxide is prevented by storing it separately from sodium thiosulfate.

As for Healy, the Appellants argue that Healy discloses a light resistant container for storing solid medical agents such as tablets and capsules, not a container for holding a liquid or fluid. Therefore, the Appellants argue there is no motivation to combine the teachings of Healy and Park. Br. 6.

It is of no moment that Healy is directed to a light resistant container for storing solid medical agents. We find that one of ordinary skill in the art would have understood the teachings of Healy to be equally applicable to the storage of light sensitive materials in liquid form. The Appellants have failed to direct us to any evidence to the contrary.

Finally, referring to column 4, lines 11-13 of Cook, the Appellants argue that Cook discloses a light-excluding multilayered material. The Appellants argue that the teachings of Cook in combination with the teachings of Park and Healy do not suggest the claimed invention which enables visual inspection of the bottle contents. Br. 7.

The embodiment of the invention described at column 4, lines 11-13 of Cook is directed to a multilayered material containing a light barrier additive such as titanium dioxide. Cook 3:66-4:1. Cook discloses that titanium dioxide effectively reflects light having a wavelength above

approximately 500 nm. Cook discloses that *some* light having a wavelength below 500 nm may be reflected when a container wall contains relatively high amounts of titanium dioxide. Cook 1:59-64. However, Cook indicates that the amount of titanium dioxide, as well as other colorants, can be varied depending upon the desired light barrier characteristics of the container. Cook 4:59-62; *see also* Cook 6:49-55. Thus, we find that the teachings of Cook are not limited to an amount of titanium dioxide that excludes all visible light.

For the reasons set forth above, the Appellants have failed to show that the Examiner reversibly erred in rejecting claim 13 under 35 U.S.C. § 103(a) as being unpatentable over the combined teachings of Park, Healy, and Cook.

3. Claims 15 and 16

The Appellants argue that claims 15 and 16 are allowable for the same reasons that the claim from which they depend, claim 13, is allowable.[8] The Appellants do not otherwise dispute the Examiner's findings or conclusion of obviousness as to claims 15 and 16. App. Br. 7-8.

Claim 13 is not patentable for the reasons set forth above. Therefore, claims 15 and 16 are likewise unpatentable.

[8] With respect to the rejection of claims 15 and 16, the Appellants "reiterate the arguments hereinabove set forth in connection with the rejection of claim 14 under 35 USC 103." Br. 7-8. Claim 14 has been cancelled, and claims 15 and 16 depend from claim 13. Therefore, we assume the Appellants intended to refer to claim 13.

F. DECISION

The rejection of claim 13 under 35 U.S.C. § 103(a) as being unpatentable over the combined teachings of Park, Healy, and Cook is affirmed.

The rejection of claims 15 and 16 under 35 U.S.C. § 103(a) as being unpatentable over the combined teachings of Park, Healy, Cook, and Roselle is affirmed.

No time period for taking any subsequent action in connection with this appeal may be extended under 37 C.F.R. § 1.136(a) (2008).

AFFIRMED

qsg

WALTER A. HACKLER
2372 S.E. BRISTOL, SUITE B
NEWPORT BEACH, CA 72660-0755