UNITED STATES PATENT AND TRADEMARK OFFICE

BEFORE THE BOARD OF PATENT APPEALS
AND INTERFERENCES

Ex parte MICHAEL A. EVANS,
DENISE DEMARAIS,
DINO DE CICCO,
ALEXANDER KHAIRKHAHAN,
and
TYLER JON STRANG,
Appellants

Appeal 2008-3686
Application 10/142,005[1]
Technology Center 3700

Decided: 24 June 2008

Before TEDDY S. GRON, CAROL A. SPIEGEL, and
RICHARD M. LEBOVITZ, *Administrative Patent Judges*.

SPIEGEL, *Administrative Patent Judge*.

DECISION ON APPEAL

---

[1] Application 10/142,005 ("the 005 application"), "Apparatus and methods for clot dissolution," was filed 8 May 2002. The 005 application is a continuation-in-part of application 09/491,401, filed 25 January 2000, now US Patent 6,663,613, issued 16 December 2003; and, of international application PCT/US01/02406, filed 24 January 2001 (Spec. 1:3-5). The real party in interest is said to be Bacchus Vascular Inc. (Amended Appellant's Brief Under 37 CFR § 41.37, filed 13 October 2006 ("App. Br."), 3).

I. Statement of the Case

Appellants appeal under 35 U.S.C. § 134 from a final rejection of all the pending claims, claims 47, 48, 64-70, and 75. We have jurisdiction under 35 U.S.C. § 6(b). We REVERSE.

The subject matter on appeal is directed to a method for dissolving and disrupting clots in blood vessels. Claim 47 is illustrative (App. Br. 14):

> 47. A method for disrupting clot over a luminal length of a blood vessel, said method comprising:
>
> positioning a catheter body at a location within the luminal length of the blood vessel, the catheter body having at least one lumen having a distal-end opening and at least one side opening; and
>
> infusing a thrombolytic agent through the distal-end opening and the at least one side opening, wherein the infusing occurs predominantly through the at least one side opening.

The Examiner has maintained the rejection of claims 47, 48, 64-70, and 75 under 35 U.S.C. § 102 as anticipated by Kokish[2] (FR[3] 2; Ans.[4] 2-3).[5]

Appellants have argued the patentability of claims 47, 48, 64-70, and 75 as a single group. Therefore, we decide this appeal on the basis of claim 47. 37 C.F.R. § 41.37(c)(1)(vii).

---

[2] US Patent 6,485,500 B1, "Emboli Protection System," issued 26 November 2002, to Kokish et al. ("Kokish").

[3] Office Action, mailed 14 October 2005, finally rejecting claims 47, 48, 64-70, and 75 ("FR").

[4] Examiner's Answer mailed 17 May 2007 ("Ans.").

[5] The Examiner withdrew the final rejection of claims 47, 48, and 64-70 under 35 U.S.C. § 102 as anticipated by US Patent 5,674,198, "Tandem Balloon Catheter," issued 7 October 1997, to James E. Leone ("Leone") (Ans. 2).

II. Findings of Fact ("FF")

The following findings of fact and those set forth in the discussion are supported by a preponderance of the evidence of record.

A. The 005 Application ("Spec.")

[1] The 005 specification describes a method for disrupting a clot comprising positioning a catheter body with at least one lumen[6] which has a distal end opening and at least one side opening at a location within the luminal length of a blood vessel; and, infusing a thrombolytic agent through the lumen's openings such that infusion predominantly occurs through the at least one side opening (Spec. 11, ¶35).

[2] Figures 20a through 20g depict one embodiment of the claimed method comprising

(a) positioning a catheter body 702 within a blood vessel at the site of a clot 706, wherein the catheter body 702 includes a distal balloon 708, a proximal balloon 710, a side opening 712, and a distal-end opening 714, by means of a guide wire 716;

(b) inflating distal balloon 708 and removing guide wire 716;

(c) inflating proximal balloon 710 and infusing a thrombolytic agent through side opening 712 and distal opening

[6] Merriam-Webster's Collegiate Dictionary, tenth edition, Merriam-Webster, Incorporated, Springfield, Massachusetts (1998) ("Dictionary"), defines "lumen," in relevant part, as "1: the cavity of a tubular organ < the ~ of a blood vessel> 2: the bore of tube (as of a hollow needle or catheter)" (page 692).

714, wherein a majority of the thrombolytic agent is held in an area between proximal balloon 710 and distal balloon 708;

(d) disrupting the clot;

(e) deflating proximal balloon 710 and removing the disrupted clot 706 and secondarily formed clot pieces 718, along with infused thrombolytic agent;

(f) repositioning guide wire 716 in catheter body 702;

(g) deflating distal balloon 708 and removing catheter body 702 and then guide wire 716 from the blood vessel (Spec. 28-29, ¶¶ 109-115).

[3] Figures 20a through 20g of the Specification are reproduced below

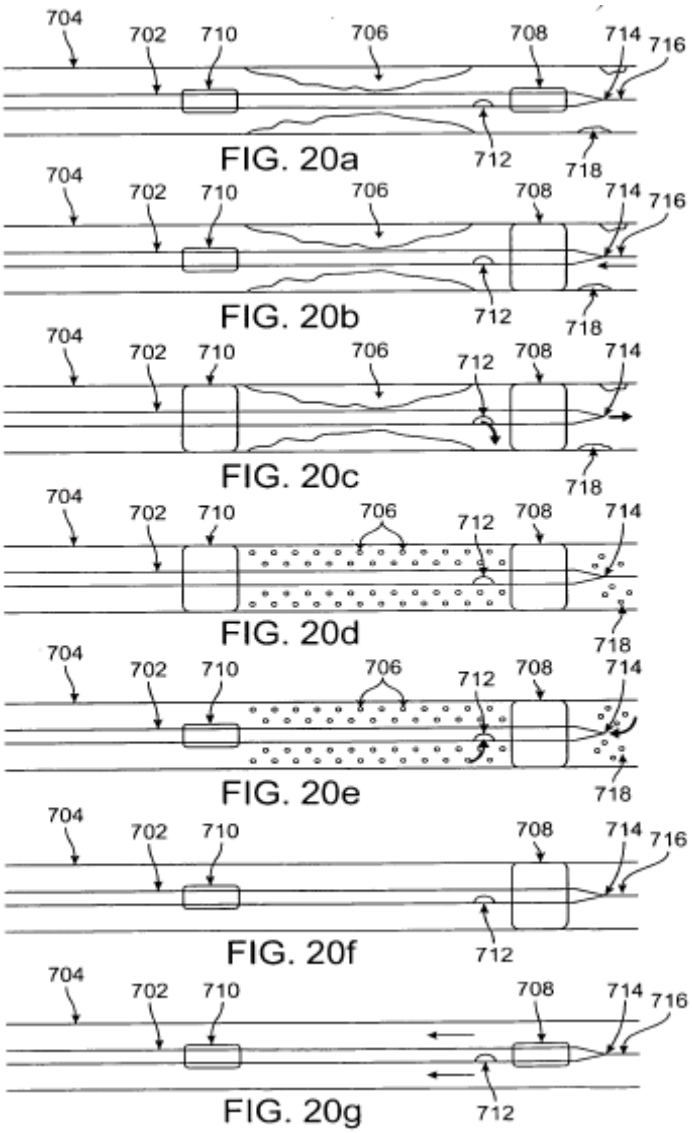

{Figures 20a-20g of Appellants' application illustrate a method for disrupting a clot according to one embodiment of the claimed invention.}[7]

[4] Generally, preferential infusion through the at least one side opening "is achieved via a larger cross-sectional area of the side opening

[7] The captions in curly braces following the Figures are provided so the publication of this Decision on the USPTO website complies with Section 508 of the U.S. Rehabilitation Act and are *not* part of the Decision.

compared to the distal-end opening, via a flow resistor, or by any other suitable means" (Spec. 12, ¶40).

B. Kokish

[5] Kokish describes a dual balloon emboli (clot) protection system for isolating a portion of a blood vessel and treating clots in the isolated portion to prevent the clots from migrating into the rest of the vasculature (Kokish 3:12-17).

[6] Kokish Figure 5 illustrates an embodiment of a system 70 comprising a first catheter, i.e., distal balloon catheter 72, with an angioplasty balloon 86 attached thereto. Distal balloon catheter 72 has a distal end 74, a proximal end 76, and a shaft 78. An inflatable balloon 80 is mounted on or near the distal end of shaft 78 and has a plurality of perforations 82 facing towards angioplasty balloon 86. Distal balloon catheter 72 has a lumen 81 for inflating and deflating distal balloon 80 and a lumen 88 for inflating or deflating angioplasty balloon 86. Distal balloon catheter 72 also has an evacuation port 87 and a lumen 89 for removing fluids injected through perforations 82. Finally, distal balloon catheter 72 has a lumen 94 for a guide wire device 96. [Kokish 11:42 - 12:43.]

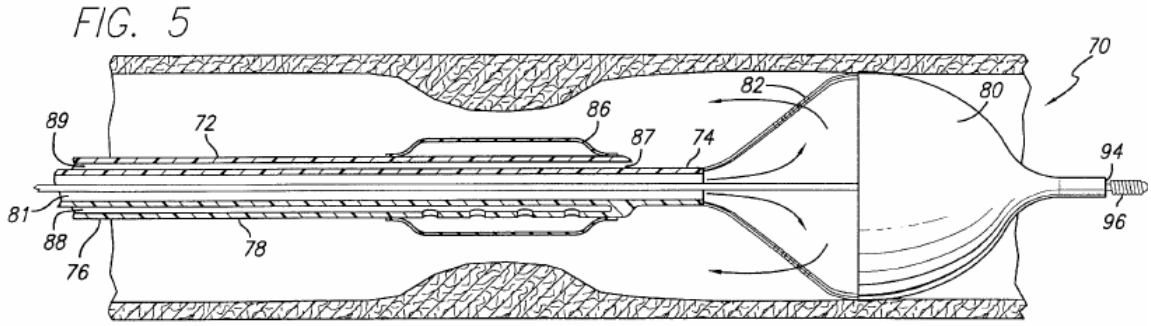

{Kokish Figure 5 is a sectional view of a distal blocking balloon catheter having an angioplasty

balloon incorporated and shows the distal balloon inflated and placed distal to a target site with emboli and the angioplasty balloon deflated and placed at the target site to be treated.}

[7] Figure 6 of Kokish illustrates a variation on the emboli protection system 70 shown in Figure 5. Specifically, the system 70 shown in Figure 6 adds a second catheter, i.e., proximal balloon catheter 90, carrying an inflatable balloon 91. Proximal balloon catheter 90 is placed over distal balloon catheter 72 (*see* numbering in Fig. 5). Distal balloon 80 and proximal balloon 91 are placed on either side of angioplasty balloon 86 and a target site to be treated. Proximal balloon 91 has a plurality of perforations 92 facing towards angioplasty balloon 86. Proximal balloon catheter 90 is open ended and has a lumen 102 for inflating proximal balloon 91. Proximal balloon catheter 90 also has an evacuation port 100 and a lumen 104 for removing fluids and emboli through proximal balloon catheter 90. [Kokish 12:44 - 13:19.]

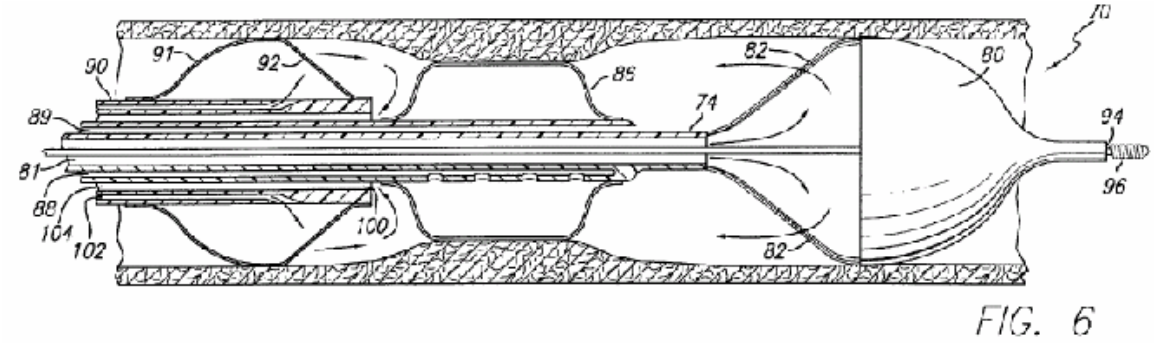

FIG. 6

{Kokish Figure 6 is a sectional view showing a proximal blocking balloon catheter placed over the distal blocking balloon catheter of Kokish Figure 5, and shows an inflated distal blocking balloon and an inflated proximal blocking balloon placed

on either side of an angioplasty balloon inflated at a target site to be treated.}

[8] The perforations of distal and proximal balloons (82 and 92) are dimensioned so that the perforations remain closed up to a predetermined low pressure of an inflation fluid, so that the balloons (80 and 91) can be inflated to occlude a blood vessel, and so that when inflation fluid is supplied at a pressure above the predetermined low pressure, the perforations (82 and 92) will open to release the inflation fluid away from the balloon (80 or 91) toward the target area (Kokish 12:26-34; 13:6-16).

[9] A thrombolytic inflation fluid can be used break down and dissolve clots or plaque through both the chemical effect of the thrombolytic agent and the mechanical effect of the streaming action of the fluid ejected (Kokish 5:13-19; 17:31-45).

[10] The thrombolytic agent and clot or plaque debris are simultaneously removed from the target site through the evacuation ports provided in the catheter(s) (Kokish 5:19-21).

[11] A preferred method of using a double catheter system as shown in Kokish Figure 6 comprises

(i) placing a guide wire 96 across a target site in a blood vessel;

(ii) threading a distal balloon catheter 72 having an angioplasty balloon 86 attached thereto over guide wire 96 to position inflatable balloon 80 distal to both the target site and angioplasty balloon 86;

(iii) positioning a proximal balloon catheter (90) proximal to the target site;

(iv) simultaneously inflating the distal 80 and proximal 92 balloons with an inflation fluid at a low pressure to isolate the target site from surrounding vasculature;

(v) performing balloon angioplasty;[8]

(vi) removing or deflating angioplasty balloon 86 while leaving distal 80 and proximal 92 balloons inflated; and,

(vii) increasing the pressure of the inflation fluid to cause the fluid to stream out of the balloon perforations 82 and 92, thereby dislodging and carrying clots from the isolated target site through evacuation ports and lumens (Kokish 16:29 - 17:45).

[12] Specifically, evacuation port 87 and lumen 89 on distal baloon catheter 72 and evacuation port 100 and lumen 104 on proximal balloon catheter 90 remove fluids and debris (see FF 6 and 7).

C. The Examiner's findings

[13] The Examiner's entire findings of fact and statement of final rejection consisted of "Kokish discloses catheters (figs. 13-17) and a blood vessel clot disrupting method including the elements and steps set forth in the claims" (FR[9] 2).

[14] In response to Appellants' principal brief, the Examiner recast the rejection, stating "Please see Figures 5-6 and the respective portions of the specification" of Kokish (Ans. 3).

[15] According to the Examiner,

---

[8] The Dictionary defines "balloon angioplasty," at page 88, as "dilation of an atherosclerotically obstructed artery by the passage of a balloon catheter through the vessel to the area of disease where inflation of the catheter compresses the plaque against the vessel wall."

[9] Office Action mailed 14 October 2005 ("FR").

> Figures 13-17 were relied on to help explain the rejection, but many embodiments read on the limitations of the instant claims, namely Figures 5-6. The Applicant's arguments regarding *only* Figures 13-17 are therefore moot because they do not include everything taught by Kokish . . . . [Ans. 5.]

[16] The Examiner then found

(a) distal balloon and proximal balloon catheters 90 and 72 of Kokish together corresponded to the "catheter body" recited in claim 47 (Ans. 3),

(b) distal end 74 of distal catheter 72 of Kokish corresponded to "the distal-end opening" of the "catheter body" recited in claim 47 (Ans. 3),

(c) the end of proximal balloon 91 inflating lumen 102 of proximal balloon catheter 90 of Kokish directly abutting proximal balloon 91 corresponds to "the at least one side opening" of the "catheter body" recited in claim 47 (Ans. 3), and

(d) Kokish inherently described "infusing . . . predominantly through the at least one side opening" because

> *the side opening is located closer to the fluid source than the distal end opening so the fluid is inherently delivered at a greater pressure through the side opening and therefore more fluid is delivered. The proximal balloon (91) is also smaller than the distal balloon (80) so the predetermined pressure for opening of the perforations is reached faster in the proximal balloon and therefore fluid is delivered for a longer time through the side openings. See column 11, lines 10-25.* [Ans. 3-4, original italics.]

D. Appellants' position

[17] In response to the Examiner's original statement of rejection, Appellants argued that Kokish failed to describe delivering or infusing a thrombolytic agent "through a distal-end opening and at least one side opening of a catheter lumen" "in Figures 13-17 or elsewhere" (App. Br. 9).

[18] Appellants further argued that the Examiner had not addressed the claim limitation "wherein the infusing occurs predominantly through the at least one side opening" in his final rejection (App. Br. 11).

[19] In response to the Examiner's recast rejection, Appellants argued that the distal-end opening and the at least one side opening recited in claim 47 are openings in the *same* lumen, rather than openings on different catheters as in Koshish (Reply Br.[10] 5).

[20] Appellants further argue the relative sizes of balloons 80 and 91 would appear to be irrelevant to teaching the predominant flow aspect of claim 47 because balloon 80 is part of the first catheter 72, whereas balloon 91 is part of the second catheter 90 (Reply Br. 6).

[21] "Presumably, two separate and different catheters would be coupled to different fluid sources and/or fluid flow independently controlled, rather than coupled to the same fluid source and under the same flow control, as implied by the Examiner" (Reply Br. 6-7).

[22] Appellants contend "the Examiner's stated reasoning and reading of unsupported limitations into the teachings of Kokish would appear to be without merit, particularly in view of the separate catheters 72 and 90 of Kokish" (Reply Br. 7).

---

[10] Reply Brief filed 12 July 2007 ("Reply Br.").

III. Discussion

Claimed subject matter is anticipated by the teachings of a reference only if the claimed subject matter is identically disclosed or described by the teachings of the reference. *Richardson v. Suzuki Motor Co., Ltd.*, 868 F.2d 1226, 1236 (Fed. Cir. 1989). To be anticipated, the claimed subject matter must be disclosed "clearly and unequivocally" in the reference. *In re Arkley*, 455 F.2d 586, 587 (C.C.P.A. 1972).

We find that the method of claim 47 requires infusing a thrombolytic agent through a distal-end opening and at least one side opening on the *same* catheter body. Kokish Figure 6 illustrates a first catheter, distal balloon catheter 72, threaded over a guide wire 96 and a second catheter, proximal balloon catheter 90, placed over the first catheter (FF 6 and 7). In other words, distal catheter 72 is "nested inside" outer proximal catheter 90. We agree with Appellants (Reply Br. 5) that the Examiner is picking and choosing among elements from different catheters 72 and 90 of Kokish and treating those elements as parts of a single catheter body. Thus, we find that the subject matter of claim 47 is not identically disclosed or described by Kokish.

Furthermore, inherent anticipation cannot be based on possibilities or probabilities. *See Akamai Technologies, Inc. v. Cable & Wireless Internet Services, Inc.*, 344 F.3d 1186, 1192 (Fed. Cir. 2003) ("A claim limitation is inherent in the prior art if it is necessarily present in the prior art, not merely probably or possibly present."); and *In re Robertson*, 169 F.3d 743, 745 (Fed. Cir. 1999) ("Inherent anticipation requires that the missing descriptive material is 'necessarily present,' not merely probably or possibly present, in the prior art."). The Examiner relies on the relative size of the proximal 91

and distal 80 balloons in Figure 6 and on the text at column 11, lines 10-25, of Kokish to establish that Kokish inherently describes "infusing . . . predominantly through the at least one side opening" (FF 16). First, arguments based on drawings not explicitly made to scale are unavailing. *In re Wright*, 569 F.2d 1124, 1127 (CCPA 1977) ("Absent any written description in the specification of quantitative values, arguments based on measurements of a drawing are of little value."). Second, column 11, lines 10-25, in Kokish relate to Figure 3 and the Examiner has not explained the relevancy of this text to Kokish Figure 5 and/or Figure 6. Therefore, we agree with Appellants (Reply Br. 7) that the Examiner has failed to provide a factual basis sufficient to support the alleged inherent disclosure in Kokish.

Based on the foregoing, we reverse the rejection of claims 47, 48, 64-70, and 75 under § 102(b) as anticipated by Kokish.

IV. Order

Upon consideration of the record, and for the reasons given, it is

ORDERED that the Examiner's decision to reject claims 47, 48, 64-70, and 75 under 35 U.S.C. § 102(b) as anticipated by Kokish is REVERSED.

REVERSED

TOWNSEND AND TOWNSEND AND CREW, LLP
Two Embarcadero Center
Eighth Floor
San Francisco, CA 94111-3834