UNITED STATES PATENT AND TRADEMARK OFFICE

BEFORE THE BOARD OF PATENT APPEALS
AND INTERFERENCES

Ex parte RALPH F. SIMMONS, JR. and VERNON L. KNOWLES

Appeal 2008-3712
Application 10/770,747
Technology Center 2600

Decided: October 31, 2008

Before JOSEPH F. RUGGIERO, JOHN A. JEFFERY, and KARL D. EASTHOM, *Administrative Patent Judges*.

JEFFERY, *Administrative Patent Judge*.

DECISION ON APPEAL

Appellants appeal under 35 U.S.C. § 134 from the Examiner's rejection of claims 1-24. We have jurisdiction under 35 U.S.C. § 6(b). We affirm-in-part.

STATEMENT OF THE CASE

Appellants invented a read and write head for a magnetic tape drive for reading and recording multiple tracks on a magnetic tape. In one implementation, multiple groups of data elements are spaced apart different distances and overlap.[1] Claim 1 is illustrative:

1. A head for reading and recording data on multiple tracks on a magnetic tape, comprising:

a first group of data elements spanning a first spanning distance on the head;

a second group of data elements spanning a second spanning distance on the head greater than the first spanning distance; and

the second group overlapping the first group such that some elements are common to both groups.

The Examiner relies on the following prior art references to show unpatentability:

Adams	US 5,488,525	Jan. 30, 1996
Chliwnyj	US 6,831,805 B2	Dec. 14, 2004 (filed Jun. 27, 2002)

1. Claims 1-24 stand rejected under 35 U.S.C. § 102(b) as being anticipated by Adams (Ans. 3-6).
2. Claim 19 stands rejected under 35 U.S.C. § 102(b)[2] as being anticipated by Chliwnyj (Ans. 6).[3]

---

[1] *See generally* Spec. ¶¶ 0021-24; Figs. 6 and 7.
[2] Although the Examiner incorrectly rejected this claim under § 102(b), the Chliwnyj patent actually qualifies as prior art under § 102(e) since it issued

Rather than repeat the arguments of Appellants or the Examiner, we refer to the Briefs and the Answer[4] for their respective details. In this decision, we have considered only those arguments actually made by Appellants. Arguments which Appellants could have made but did not make in the Briefs have not been considered and are deemed to be waived. *See* 37 C.F.R. § 41.37(c)(1)(vii).

THE REJECTION OVER ADAMS

We first consider the Examiner's anticipation rejection of claims 1-24 over Adams. The Examiner relies principally on certain identified write and read elements in module M1 of the magnetic head assembly in Figure 4 of Adams as corresponding to the recited first and second groups of data elements. Specifically, the Examiner indicates that (1) the first group corresponds to the "177 μ Write" and "76 μ Read" elements in the middle zone of the head assembly, and (2) the second group "is directed from the top zone to the bottom zone" and includes the "31.5 μ "Write" element in the top zone and the "19 μ Read" element in the bottom zone (Ans. 7).

---

after, but was filed before, the filing date of the present application (Feb. 2, 2004). Nevertheless, we deem this error harmless as it does not affect our decision regarding the merits of the anticipation rejection.

[3] The Examiner has withdrawn a double patenting rejection (Ans. 7). Accordingly, that rejection is not before us.

[4] Throughout this opinion, we refer to (1) the Appeal Brief filed May 24, 2007; (2) the Examiner's Answer mailed September 7, 2007; and (3) the Reply Brief filed November 7, 2007.

Regarding representative claim 1,[5] Appellants argue that Adams does not disclose (1) a second group of data elements on a recording head that span a distance greater that the spanning distance of the first data elements (i.e., the first spanning distance), and (2) the second group overlapping the first group such that some elements are common to both groups. According to Appellants, Adams' data elements are arranged in top and bottom zones of the magnetic head such that they are mirror images of each other. As such, Appellant contends, these groups do not overlap (App. Br. 9-10; Reply Br. 2-3). Appellant makes similar arguments with respect to independent claims 16 and 23 (App. Br. 13, 17).

Regarding representative claim 10, Appellants argue that, in light of this mirror image arrangement of zones, Adams does not disclose second data elements that are spaced apart from one another a second distance smaller than the first distance across a second part of the head adjacent to the first part of the head as claimed. Appellants add that Adams also fails to disclose the particular arrangement of the recited third data elements (App. Br. 11).

As to representative claim 14, Appellants argue that Adams does not disclose second data elements that are spaced apart from one another a second distance 1/3 the first distance (i.e., the spacing of the first data elements) across a second part of the head adjacent to the first part of the

[5] Appellants argue all independent claims separately, but do not separately argue the dependent claims. *See* App. Br. 9-19. Accordingly, we treat each independent claim separately and select each independent claim as representative of those groups of claims that include claims dependent on the representative independent claim. *See* 37 C.F.R. § 41.37(c)(1)(vii).

head. Appellants further contend that the Adams also fails to disclose the particular arrangement of the recited third data elements (App. Br. 12).

Regarding claim 18, Appellants argue that Adams does not disclose (1) multiple pairs of magnetic servo elements such that each succeeding pair of servo elements is disposed between the elements of the preceding pair, and (2) an array of magnetic data elements positioned between the elements in the last pair of servo elements, as claimed (App. Br. 13-14). Appellants make similar arguments with respect to (1) claim 24 (App. Br. 18); (2) the three pairs of magnetic servo elements and the array of magnetic data elements between the servo elements in the third pair in claim 19 (App. Br. 15), and (3) the pairs of servo elements and the array of data elements nominally spanning a fraction of the width of a data band corresponding to the number of pairs of servo elements, as well as the arrangement of the servo elements in claim 20 (App. Br. 16-17).

THE REJECTION OVER CHLIWNYJ

Regarding the Examiner's anticipation rejection of claim 19 over Chliwnyj, Appellants argue that Chliwnyj fails to disclose three pairs of magnetic servo elements and therefore fails to disclose "an array of magnetic data elements positioned between the servo elements in the third pair" as claimed (App. Br. 19).

ISSUES

The issues before us, then, are first whether Appellants have shown that the Examiner erred in finding Adams discloses:

(1) a second group of data elements on a recording head that span a distance greater that the spanning distance of the first data elements (i.e., the first spanning distance), and the second group overlapping the first group such that some elements are common to both groups as claimed in claims 1, 16, and 23;

(2) second data elements spaced apart from one another a second distance smaller than the first distance across a second part of the head adjacent to the first part of the head, and the particular arrangement of the recited third data elements as claimed in claims 10 and 14;

(3) multiple pairs of magnetic servo elements such that each succeeding pair of servo elements is disposed between the elements of the preceding pair, and an array of data elements positioned between the elements in the last pair of servo elements as claimed in claims 18-20 and 24; and

(4) multiple pairs of servo elements and an array of data elements nominally spanning a fraction of the width of a data band corresponding to the number of pairs of servo elements, as well as the arrangement of the servo elements claimed in claim 20.

The second main issue is whether Appellants have shown that the Examiner erred in finding Chliwnyj discloses three pairs of magnetic servo elements such that an array of magnetic data elements is positioned between the servo elements in the third pair as claimed in claim 19.

FINDINGS OF FACT

The record supports the following findings of fact (FF) by a preponderance of the evidence:

1. Adams discloses a magnetic head assembly 40 with top and bottom zones for processing a magnetic tape 22 alternately in opposite directions (Adams, Abstract; col. 4, ll. 58-66; Fig. 1). The magnetic head assembly comprises two multi-element modules M1 and M2 with surfaces 42A, 42B that engage the tape's surface (Adams, col. 5, ll. 19-24; Fig. 2).

2. The magnetic tape is divided into (1) a top band of data tracks separated by servo tracks, and (2) a bottom band of data tracks separated by servo tracks (Adams; col. 5, ll. 38; Fig. 3).

3. Figure 4 details the surfaces of the head assembly for each multi-element module M1 and M2 which include a particular arrangement of read, write, and servo elements. As shown below, the head assembly has top and bottom zones separated by a middle zone such that the elements in the top and bottom zones are a mirror image with respect to one another. This arrangement facilitates a particular operation of the elements in each zone depending on the direction that the tape travels (Adams, col. 5, l. 66 - col. 6, l. 28; col. 8, ll. 3-30; col. 10, ll. 5-31). These features are illustrated in Figure 4 as reproduced below:

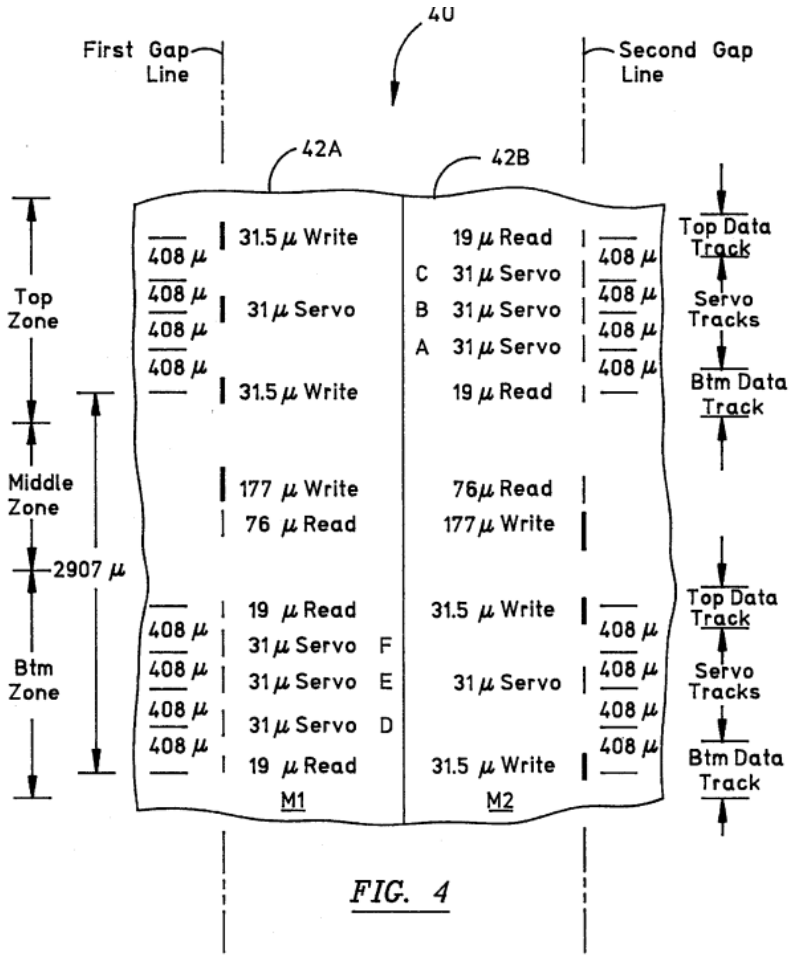

FIG. 4

Figure 1: Reproduction of Adams' Figure 4 Depicting the Head Assembly

4. In Adams, servo elements D, E, F in module M1 have counterpart servo elements A, B, C in module M2 that operate depending on the direction of tape travel. For example, when the tape is moving to the right, servo element A successively reads 12 servo tracks (i.e., tracks 37-48) ultimately causing the top and bottom write elements in the top zone to each write 12 data tracks, respectively. Likewise, when the tape is moving to the left, servo element D successively reads 12 servo tracks (tracks 121-132) that causes the top and bottom write elements in the bottom zone to write 12 data tracks, respectively. After this process, the middle servo elements B

and E operate to write another set of 12 tracks in each zone respectively. By successively alternating the tape travel direction (i.e., from right to left and vice-versa), the top and bottom zones each likewise successively become controlling to ultimately write all 168 tracks (Adams, col. 10, ll. 5-65; Figs. 3-5).

5. Chliwnyj discloses a multi-element tape head 190 constructed as shown in Figure 2B. The head includes 32 read/write element pairs and three sets of servo read elements corresponding to the three servo areas 250, 260, and 270 (Chliwnyj, col. 4, ll. 1-8; Figs. 1, 2A).

6. The 32 read/write element pairs are divided into groups of eight adjacent groups that are separated by two tracks occupied by a group of four servo sensors (i.e., servo groups 255, 265, 275) (Chliwnyj, col. 4, ll. 8-12; Fig. 2B).

PRINCIPLES OF LAW

Anticipation is established only when a single prior art reference discloses, expressly or under the principles of inherency, each and every element of a claimed invention as well as disclosing structure which is capable of performing the recited functional limitations. *RCA Corp. v. Appl. Dig. Data Sys., Inc.*, 730 F.2d 1440, 1444 (Fed. Cir. 1984); *W.L. Gore & Assoc., Inc. v. Garlock, Inc.*, 721 F.2d 1540, 1554 (Fed. Cir. 1983).

ANALYSIS

THE REJECTION OVER ADAMS

Claims 1-9, 16, 17, and 23

We find no error in the Examiner's interpretation of the data elements as corresponding to the first and second groups of such elements, respectively. For clarity, we reproduce the relevant portion of Figure 4 of Adams with the Examiner's grouping below:

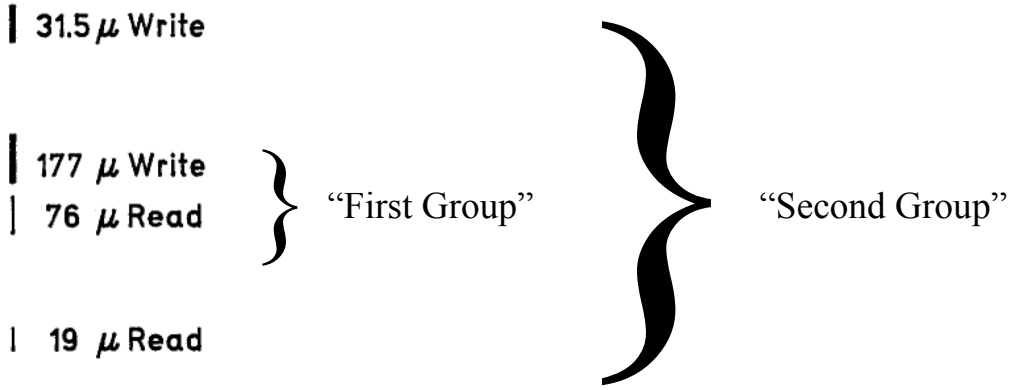

Table 1: Examiner's Grouping of Data Elements of Module M1 of Magnetic Head Assembly in Fig. 4 of Adams

In our view, the scope and breadth of claim 1 simply does not preclude this interpretation. Appellants are correct (App. Br. 9-10; Reply Br. 2-3) that the top and bottom zones of elements in Adams are mirror images with respect to each other (FF 3). But nothing in the claim precludes grouping the elements such that one group includes elements from the top, middle, and bottom zones respectively, and another group includes only

those elements from the middle zone in the manner proposed by the Examiner and illustrated in Table 1 above.

As shown in Table 1, the data elements in the second group span a distance from the top zone to the bottom zone via the middle zone (i.e., from the "31.5 μ "Write" element in the top zone to the "19 μ Read" element in the bottom zone). This span, however, encompasses the span of the first group which corresponds to the "177 μ Write" and "76 μ Read" elements in the middle zone of the head assembly. As such, the second group therefore overlaps the first group such the first group's elements are common to both groups. Adams therefore fully meets all limitations of representative claim 1.

For the foregoing reasons, Appellants have not persuaded us of error in the Examiner's rejection of representative claim 1. Therefore, we will sustain the Examiner's rejection of that claim, and claims 2-9 which fall with claim 1.

For similar reasons, we will also sustain the Examiner's rejection of (1) independent claims 16 and 23 which recite commensurate limitations, and (2) dependent claim 17 which was not separately argued.

Claims 10-13

Regarding representative claim 10, the Examiner equates the elements "76μ Read" and "177μ Write" in module M2 of Figure 4 as corresponding to the recited third data elements (Ans. 7). While we find no error in this interpretation, the claim requires that these data elements be spaced from one another *the first distance* (i.e., the same distance that the first data elements are spaced apart from each other) across a third part of the head

adjacent to the second part of the head. Although the rejection is not a model of clarity, we presume that the Examiner intended for "first data elements" to correspond to the "first group" of data elements noted above in connection with claim 1 (i.e., the "177 μ Write" and "76 μ Read" elements in the middle zone). Likewise, we presume the Examiner intended the same correspondence between the "second data elements" and the "second group" of data elements identified in connection with claim 1.

This interpretation, however, does not anticipate claim 10. It is true that the spacing between the first and third data elements in Adams under this interpretation would be the same (i.e., the elements in the middle zone of both modules M1 and M2 are identically spaced as shown in Figure 4). But the claim also requires spacing the "second data elements" apart from each other a distance *smaller* than the first distance (i.e., the spacing of the first elements).

This is not the case in Figure 4. While the second group of data elements have different spacing (i.e., the spacing between the "31.5 μ Write" element in the top zone and the "177μ Write" element in the middle zone is wider than that of the two elements in the middle zone), they do not have a spacing that is smaller than that of the first group of elements.

Nevertheless, given its scope and breadth, claim 10 is fully met for the data elements identified as follows:

Claim 10 Limitation	**Corresponding Elements in Figure 4 of Adams**
"first data elements"	Elements in Top Zone of Module M1 (1)"31.5μ Write"; (2) "31.5μ Servo"; (3)"31.5μ Write"
"second data elements"	Elements in Middle Zone of Module M1 (1)"177μ Write"; (2) "76μ Read"
"third data elements"	Elements in Bottom Zone of Module M2 (1)"31.5μ Write"; (2) "31.5μ Servo"; (3)"31.5μ Write"

Table 2: Limitations of Claim 10 and Corresponding Elements in Figure 4 of Adams

Given the scope and breadth of claim 10, nothing in the claim precludes this identification of data elements notwithstanding the fact that they are in different zones or that the top and bottom zones are mirror images of each other. Moreover, nothing in the claim precludes the "third data elements" from being located in the bottom zone of adjacent module M2. We recognize that these data elements are not in horizontal alignment with the "second part of the head" containing the second data elements (i.e.,

the middle zone of module M1). Nevertheless, the third data elements are *adjacent* to the second data elements in the middle zone of module M1 given the breadth of the term "adjacent."

Additionally, under this interpretation, the relative spacing of the second data elements is smaller than that of the first data elements as shown in Figure 4. Moreover, the relative spacing of the third data elements is identical to that of the first data elements (i.e., the third data elements are spaced "the first distance" across a third part of the head as claimed). As such, claim 10 is fully met by Adams.

For the foregoing reasons, Appellants have not persuaded us of error in the Examiner's rejection of representative claim 10. Therefore, we will sustain the Examiner's rejection of that claim, and claims 11-13 which fall with claim 10.

Claims 14 and 15

We will not, however, sustain the Examiner's rejection of independent claim 14. While we find that the relative spacing of the second data elements is smaller than that of the first data elements as shown in Figure 4, we fail to see how the second data elements are necessarily spaced apart from one another a second distance that is 1/3 the first distance (i.e., the relative spacing of the first data elements).

The Examiner's reliance on the servo elements in Figure 4 and the discussion in column 3 of Adams (Ans. 7) is unavailing. This passage indicates that if the magnetic tape has 12 servo tracks in each band that corresponds to a zone, then 36 tracks are written in a given direction in the corresponding zone (Adams, col. 3, ll. 26-36). We fail to see—nor has the

Examiner shown—how this teaching necessarily establishes a spacing of second data elements that is 1/3 of the first data elements as claimed.

For the foregoing reasons, Appellants have persuaded us of error in the Examiner's rejection of independent claim 14. Therefore, we will not sustain the Examiner's rejection of that claim, and claim 15 for similar reasons.

Claims 18, 19, and 24

Regarding claim 18, the Examiner refers to Figure 6 and indicates that the recited "last pair" of servo elements corresponds to the first servo element in the bottom zone and the third servo element in the top zone (Ans. 8). For clarity, the relevant portion of the module M1 shown in Figure 6 of Adams is reproduced below:

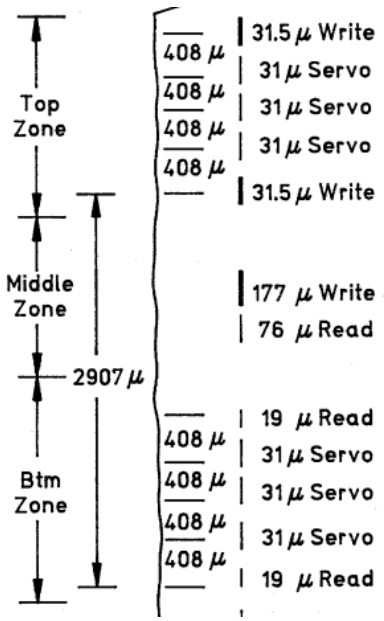

Figure 2: Relevant Portion of Module M1 in Figure 6 of Adams

As shown above, there are three servo elements in the top and bottom zones, respectively. As such, nothing in the claim precludes interpreting a pair of servo elements as (1) the first (uppermost) servo element in the top zone, and (2) the third (lowermost) servo element in the bottom zone. Notably, such a pair would be spaced apart from one another in a transverse direction generally perpendicular to the direction that the tape travels past the head (i.e., to the right or left with respect to the head).[6]

Likewise, nothing in the claim precludes another pair of servo elements as comprising (1) the second servo element in the top zone, and (2) the second servo element in the bottom zone. Similarly, nothing in the claim precludes the "last pair" of servo elements as constituting (1) the third (lowermost) servo element in the top zone, and (2) the first (uppermost) servo element in the bottom zone as the Examiner indicates (Ans. 8). This interpretation, in effect, yields three nested servo pairs such that each successive servo pair is disposed between the previous pair in a direction from the top zone towards the middle zone.

Furthermore, the data elements between this "last pair" of servo elements (i.e., the "31.5μ Write" (top zone); "177μ Write" (middle zone); "76μ Read" (middle zone); and "19μ Read" (bottom zone) fully meet the recited array of magnetic data elements. Claim 18 is therefore fully met by Adams.

---

[6] *See, e.g.*, Adams, col. 10, ll. 5-31 (describing writing data tracks with the head assembly of Figure 4 as the tape moves right and left with respect to the head).

For the foregoing reasons, Appellants have not persuaded us of error in the Examiner's rejection of independent claim 18. Therefore, we will sustain the Examiner's rejection of that claim, and claims 19 and 24 which recite commensurate limitations.

Claims 20-22

We will also sustain the Examiner's rejection of representative claim 20. In Adams, servo elements D, E, F in module M1 have counterpart servo elements A, B, C in module M2 that operate depending on the direction of tape travel. For example, when the tape is moving to the right, servo element A successively reads 12 servo tracks (i.e., tracks 37-48) ultimately causing the top and bottom write elements in the top zone to each write 12 data tracks, respectively. Likewise, when the tape is moving to the left, servo element D successively reads 12 servo tracks (tracks 121-132) that causes the top and bottom write elements in the bottom zone to write 12 data tracks, respectively. After this process, the middle servo elements B and E operate to write another set of 12 tracks in each zone respectively. By successively alternating the tape travel direction (i.e., from right to left and vice-versa), the top and bottom zones each likewise successively become controlling to ultimately write all 168 tracks. (Adams, col. 10, ll. 5-65; Figs. 3-5) (FF 4).

Based on this functionality, each servo element in the top zone has a counterpart servo element in the bottom zone to yield three nested pairs of servo elements (i.e., A and F, B and E, C and D). *See* Adams, Fig. 4. Although these three nested pairs are not in vertical alignment since they are in different modules M1 and M2, they are nonetheless "generally

perpendicular" to the tape travel direction in light of the breadth of the limitation.

Moreover, under this interpretation, an array of data elements would be disposed between the last pair of servo elements (e.g., the data elements in and adjacent to the middle zone that correspond to the "second group" noted above in connection with claim 1 (M1) and the corresponding central data elements in M2)). Based on the respective data bands shown in Figure 3 and the corresponding functionality of these servo pairs and corresponding data elements which span a fraction of the width of the data band as noted above, Appellants have not persuaded us of error in the Examiner's position that this functionality meets the limitations of claim 20.

For the foregoing reasons, Appellants have not persuaded us of error in the Examiner's rejection of representative claim 20. Therefore, we will sustain the Examiner's rejection of that claim, and claims 21 and 22 which fall with claim 20.

THE REJECTION OVER CHLIWNYJ

We will not, however, sustain the Examiner's rejection of claim 19 over Chliwnyj. Chliwnyj discloses a multi-element tape head 190 constructed as shown in Figure 2B. The head includes 32 read/write element pairs and three sets of servo read elements corresponding to the three servo areas 250, 260, and 270. The 32 read/write element pairs are divided into groups of eight adjacent groups that are separated by two tracks occupied by a group of four servo sensors (i.e., servo groups 255, 265, 275) (FF 5-6).

As shown in Figure 2B, the servo groups 255, 265, 275 each contain tracks occupied by a group of four servo sensors (FF 6). The Examiner

relies on this figure for the recited three pairs of magnetic servo elements, namely elements 264/268 as corresponding to the first pair, and elements 274/258 as corresponding to the second pair (Ans. 10).

But we fail to see how the identified second pair of elements is spaced apart from one another transversely such that it is *between* the servo elements in the first pair. As shown in Figure 2B, the elements of the identified first pair 264/268 have nothing between them, let alone two additional pairs of servo elements.

Claim 19 effectively calls for three nested pairs of servo elements such that the second pair is between the elements of the first pair, and the elements of the third pair are between those of the second pair. Additionally, the array of magnetic data elements must be between the elements in the third pair.

We do note that the identified pairs in Figure 2B of Chliwnyj could have such a nested arrangement if the labels were changed. That is, pair 264/268 (i.e., the "third pair" under this interpretation) would be contained within pair 254/278 (the "second pair"), which would be likewise contained within the pair 258/274 (the "first pair"). However, there are simply no data elements between the elements in the third pair under this interpretation as they are directly contiguous with each other.

For the foregoing reasons, Appellants have persuaded us of error in the Examiner's anticipation rejection of claim 19 over Chliwnyj. Therefore, we will not sustain the Examiner's rejection of that claim.

CONCLUSIONS OF LAW

Appellants have not shown that the Examiner erred in rejecting claims 1-13 and 16-24 over the disclosure of Adams under § 102. Appellants have, however, shown that the Examiner erred in rejecting (1) claims 14 and 15 over Adams, and (2) claim 19 over Chliwnyj under § 102.

DECISION

The Examiner's decision rejecting claims 1-13 and 16-24 is affirmed, but that decision rejecting claims 14 and 15 is reversed. Accordingly, the Examiner's rejection of claims 1-24 is affirmed-in-part.

No time period for taking any subsequent action in connection with this appeal may be extended under 37 C.F.R. § 1.136(a)(1)(iv).

AFFIRMED-IN-PART

gvw

HEWLETT PACKARD COMPANY
INTELLECTUAL PROPERTY ADMINISTRATION
P. O. BOX 272400
3404 E. HARMONY ROAD
INTELLECTUAL PROPERTY ADMINISTRATION
FORT COLLINS, CO 80527-2400