UNITED STATES PATENT AND TRADEMARK OFFICE

BEFORE THE BOARD OF PATENT APPEALS
AND INTERFERENCES

Ex parte HELMUT STEINHILBER, LUDWIG BANTLE
and HEINZ FROECHTE

Appeal 2008-3781
Application 10/734,442
Technology Center 3600

Decided: September 22, 2008

Before WILLIAM F. PATE, III, LINDA E. HORNER and
KEN B. BARRETT, *Administrative Patent Judges.*

BARRETT, *Administrative Patent Judge.*

DECISION ON APPEAL

STATEMENT OF CASE

Helmut Steinhilber et al. (Appellants) seek our review under 35 U.S.C. § 134 from a final rejection of claims 1-3, 5-10 and 14-17. We have jurisdiction under 35 U.S.C. § 6(b).

THE INVENTION

The Appellants' claimed invention pertains to a method and a device for selecting sheets of stock, e.g., paper, from a pile for feeding to an office machine or a printer. Spec. 2, ll. 8-9, 14-16. The invention involves the use of a rolling action device to loosen the top sheet from the next sheet in the pile and to move the top sheet in the feeding direction. Spec. 4, ll. 22-24. The top sheet is moved against a stop which moves upward at an impingement angle greater than ninety (90) degrees. Spec. 4, ll. 25-27. According to the Appellants, the invention facilitates the high speed selection of sheets reliably over a wide range of sheet qualities. *See* Spec. 4, ll. 16-21. Claims 1 and 6[1], reproduced below, are representative of the subject matter on appeal.

> 1. A method for selecting the sheets of a record carrier from a pile in order to feed them to an office machine or a printer, comprising the steps:
>
> subjecting the uppermost sheet of the pile to a rolling action, through which the uppermost sheet is loosened from the next sheet on the pile and is moved in the feeding direction;
>
> moving the uppermost sheet with its front edge against a stop, which is moved under an impingement angle of more than 90 degrees in relation to a flat plane and a direction, in which the uppermost sheet is being fed; and
>
> picking up the front edge of the uppermost sheet and lifting it away from the next sheet.
>
> 6. A device for selecting sheets of a record carrier from a pile in order to feed them to an office machine or a printer,

[1] Claim 6 contains an apparent typographical error in the phrase "exerts a rolling action on the uppermost sheet in *[the]a* feeding direction." (Emphasis added.) This apparent error should be verified and, if necessary, corrected in any further prosecution.

> comprising a rolling action device that lies on the uppermost sheet of the pile and exerts a rolling action on the uppermost sheet in [the]a feeding direction, a stop mounted before the front edge of the pile pointing in the feeding direction, wherein the front edge of the uppermost sheet is moved against the stop and wherein the stop can be moved upwards at an impingement angle of more than 90 degrees in relation to a flat plane and a direction in which the uppermost sheet is fed.

THE REJECTIONS

The Examiner relies upon the following as evidence of unpatentability:

Frost	US 4,579,329	Apr. 1, 1986
Takahiro (Translated Abstract)	JP 62240237 A	Oct. 21, 1987

We note that the Examiner provided, with the Answer, an English translation of the entire Takahiro reference. However, the Form PTO-1449 in the electronic file wrapper indicates that the Examiner considered only the translated abstract supplied by the Appellants. *See* the initialed Form PTO-1449 included with the Office Action mailed December 22, 2005. Thus, we understand that the final rejection is based upon the translated Takahiro abstract.[2] For this reason and because neither the Examiner nor the Appellant appears to discuss or rely upon the translation of the entire reference, we have considered the Takahiro reference for only that which is disclosed in the translated abstract and we refer to that document herein.

[2] This understanding is further supported by the fact that the translation of the entire reference is dated October 2007 – several months after the mailing of the final rejection on November 21, 2006.

The following rejections are before us for review:

1. Claims 6 to 10 are rejected under 35 U.S.C. § 102(b) as anticipated by Takahiro.

2. Claims 1 to 3 are rejected under 35 U.S.C. § 103(a) as unpatentable over Takahiro.

3. Claim 5 is rejected under 35 U.S.C. § 103(a) as unpatentable over Takahiro and Frost.

4. Claims 14 to 17 are rejected under 35 U.S.C. § 103(a) as unpatentable over Takahiro and Frost.

ANALYSIS

The Rejection of Claims 6 through 10 Under 35 U.S.C. § 102(b) as Anticipated by Takahiro

Independent claim 6 recites: "the stop can be moved upwards at an impingement angle of more than 90 degrees in relation to a flat plane and a direction in which the uppermost sheet is fed." Claims 7 through 10 depend, either directly or indirectly, from claim 6. Appellants contend that Takahiro does not disclose the required impingement angle. *See* Replacement App. Br. 7-8, 9. The Examiner disagrees based on the Examiner's construction of the impingement angle as that between: a) the flat, horizontal plane of the sheet pile, and b) the "direction in which the sheet is moved off of the pile." Ans. 7-8.

We agree with the Appellants on this issue. The Examiner argues that Takahiro shows that "the sheet is moved off of the pile at an upward angle [away from the pile], Ans. 7, thereby disclosing the claimed impingement angle greater than 90 degrees, Ans. 7-8. Under the Examiner's

interpretation, Takahiro's stop is moving in a plane that is tilted away from the pile. *See* Ans. 3-4 (asserting that the stop in Takahiro is belt 12 and that it can be moved in the direction depicted in the Examiner's annotated figure 2). The Examiner's interpretation is incorrect because it is contrary to Appellants' Specification. *Cf. In re Baker Hughes Inc.*, 215 F.3d 1297, 1303 (Fed. Cir. 2000) (It is error to construe the claims "beyond that which was reasonable in light of the totality of the written description.").

Appellants' Specification indicates that the stop is tilted towards, rather than away from, the pile. This is illustrated in Appellants' annotated version of Application Figure 1, *see* Replacement App. Br. 8, which is reproduced below:

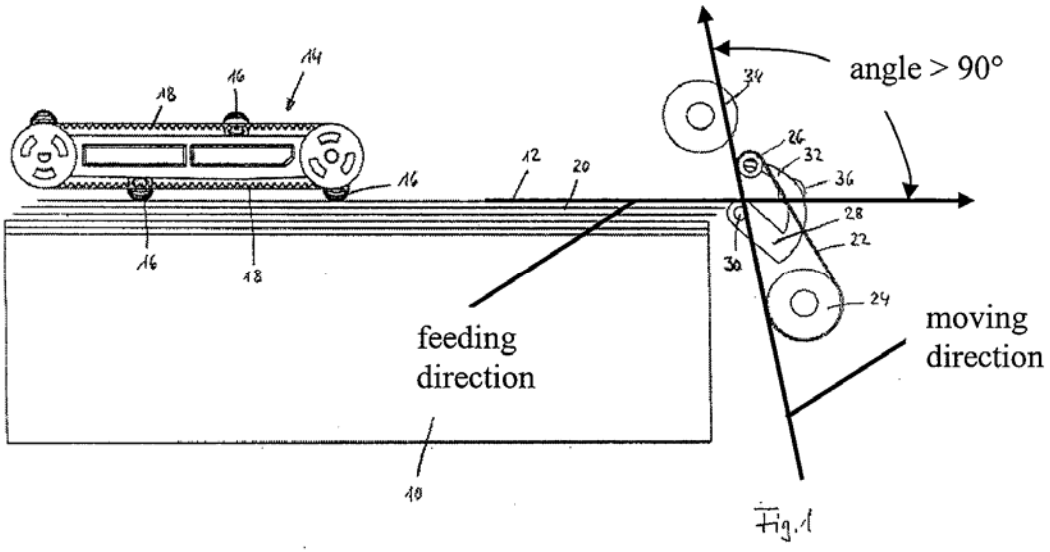

Appellants' annotated Figure 1 depicts an embodiment utilizing a belt as the stop and contains lines of direction, notations and a designation of the asserted impingement angle superimposed on the figure. Appellants' Specification, in describing the embodiment shown above, states:

> The planar surface on the belts 22, which is running upwards and is turned towards the pile 10, represents the stop for the sheets of the pile 10. In the shown implementation example, this running upwards planar surface forms with the flat plane and the feeding direction of the fed uppermost sheet 12 an angle of about 100 degrees.

Spec. 10, ll. 7-11 (as amended March 15, 2006).

Application Figures 5 through 9 depict a second embodiment utilizing a slider bar as the stop. Figure 5 is shown below:

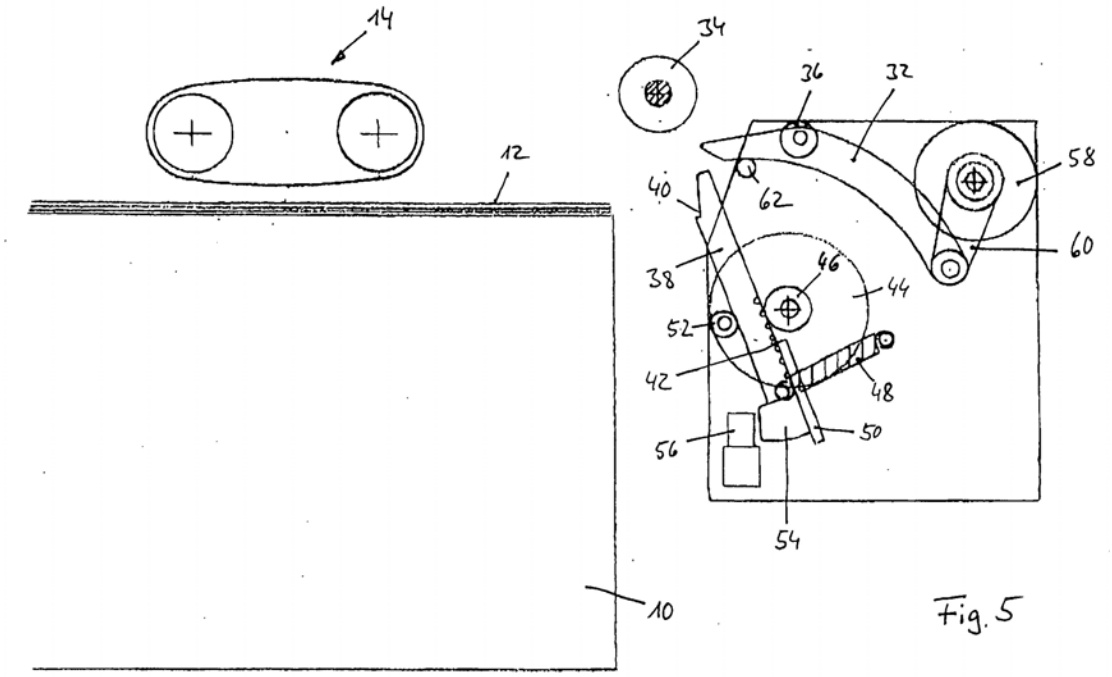

Figure 5 depicts the slider configuration before the top sheet has contacted the stop. *See* Spec. 14, ll. 5, 10-15. The Specification, in describing this embodiment, states: "The slider 38 is mounted at an impingement angle of at least 90 degrees, or, preferably, about 100 degrees, in relation to the flat plane and the feeding direction of the uppermost sheet 12." Spec. 13, ll. 8-11. Thus, similar to the figures depicting the belt embodiment, Figure 5

shows the stop tilted such that it forms an obtuse angle (relative to the plane of the pile) on the side of the stop 38 opposite the pile 10.

According to the Specification, the claimed impingement angle, with the stop tilted towards the pile, is advantageous because the front edge of the top sheet remains in contact with the stop as the sheet curves upwards during feeding. Spec. 12, l. 26 – 13, l. 2 (referring to the belt embodiment); *see also* Spec. 6, l. 27 - 7, ll. 3 ("An impingement angle of more than 90 degrees, most advantageously about 100 degrees, or setting the stop in a slightly tilted position in relation to the pile, has the advantage that the front edge of the sheet will be maintained contiguous with the stop also when the front edge of the sheet moves upwards in a bow-shaped form.").

The Examiner has not shown that Takahiro discloses a configuration in which the stop is tilted towards the pile with an impingement angle of more than 90 degrees. Therefore, we are constrained to reverse the anticipation rejection, because the Takahiro reference does not disclose every claim limitation.

The Rejection of Claims 1 through 3 Under 35 U.S.C. § 103(a) as Unpatentable over Takahiro

Claims 1 through 3 are directed to a method of selecting sheets from a pile and require that the stop be moved under an impingement angle of more than 90 degrees. *E.g.*, Independent Claim 1. The Examiner contends that "it would have been obvious to one of ordinary skill in the art to perform the method steps of claims 1-3 using the apparatus taught by [Takahiro]." Ans. 5. Applicants maintain that "Takahiro fails to teach an impingement

angle of more than 90°." Replacement App. Br. 10. As discussed above, the Examiner has not shown that Takahiro discloses the claimed impingement angle. Because the Examiner did not otherwise account for this limitation in a satisfactory manner, we cannot affirm the rejection of claims 1 through 3.

The Rejection of Claim 5 and the Rejection of Claims 14 to 17 Under 35 U.S.C. § 103(a) as Unpatentable over Takahiro and Frost

The method claim 5 and the apparatus claims 14 to 17 require a dividing element which is moved between the uppermost sheet and the next sheet on the pile. The Examiner relied upon Frost for the disclosure of a dividing element. Ans. 6. However, each of these rejected claims also requires an impingement angle of more than 90 degrees. We understand Appellants to assert that these rejections are improper because Takahiro does not disclose the claimed impingement angle. *See* Replacement App. Br. 10 (asserting that claim 5 is patentable "[f]or the reasons noted herein"); *id.* at 11 (asserting that claims 14-16 are patentable "[f]or the reasons noted herein," and asserting patentability of claim 17 by reference to discussions earlier in the brief concerning the "feed direction" in the context of the impingement angle).

For the reasons set forth above, the Examiner has not shown that Takahiro discloses the claimed impingement angle. The Examiner has not identified any teachings in Frost relating to an impingement angle to cure the deficiencies of Takahiro. Therefore, we are constrained to reverse the rejection of claims 5 and 14 through 17.

DECISION

The decision of the Examiner to reject claims 1-3, 5-10 and 14-17 is reversed.

REVERSED

vsh

ANDREAS GRUBERT
BAKER BOTTS L.L.P.
ONE SHELL PLAZA
910 LOUISIANA
HOUSTON TX 77002-4995