UNITED STATES PATENT AND TRADEMARK OFFICE

BEFORE THE BOARD OF PATENT APPEALS
AND INTERFERENCES

Ex parte SREENI MAHESHWARLA and PAVEL KLINGER

Appeal 2008-4332
Application 10/452,016
Technology Center 2800

Decided: December 22, 2008

Before KENNETH W. HAIRSTON, JOHN C. MARTIN, and JOHN A. JEFFERY, *Administrative Patent Judges.*

MARTIN, *Administrative Patent Judge.*

DECISION ON APPEAL

STATEMENT OF THE CASE

This is an appeal under 35 U.S.C. § 134(a) from the Examiner's rejection of claims 1-17, all of the pending claims, under 35 U.S.C. §§ 102 and 103(a), and under the written description requirement of § 112, first paragraph. We have jurisdiction under 35 U.S.C. § 6(b).

We affirm.

A. Appellants' invention

Appellants' invention is an electrically programmable and releasable memory cell having a floating gate with an improved injector tip. Specification [0001].

The formation of a tip in a floating gate wherein the tip is used during erase operation for poly to poly Fowler-Nordheim tunneling is well known in the art, as shown, for example, by Yeh U.S. Patent No. 5,029,130, which is incorporated by reference into Appellants' Specification. Id. at [0002].

Yeh's Figure 1 is reproduced below.

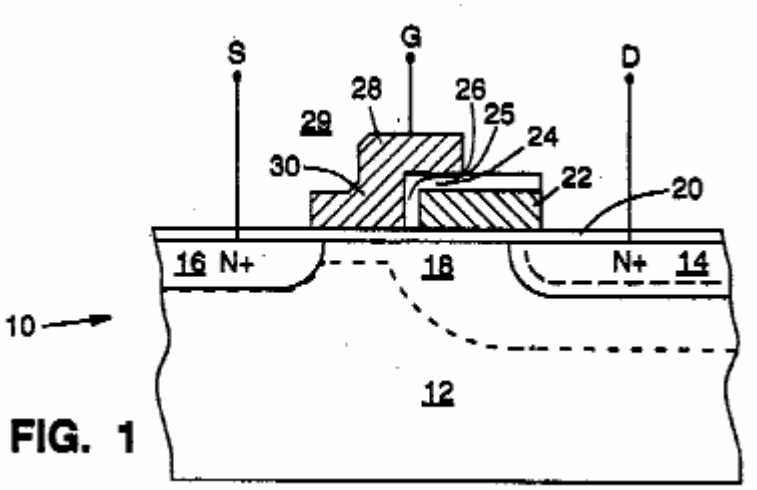

FIG. 1

Figure 1 is a cross-sectional side view of a single transistor non-volatile electrically alterable memory cell (Yeh, col. 1, ll. 33-34). This figure shows a floating gate 22 overlying part of a drain region 14 in the substrate 12 and also overlying part of channel region 18, which is located

between drain region 14 and a source region 16 in substrate 12 (*id.*, col. 2, l. 59 to col. 3, l. 1)

Yeh's Figure 3G is reproduced below.

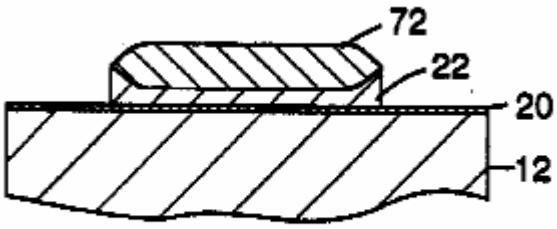

FIG. 3G

Figure 3G is a cross-sectional side view of the memory cell of Figure 1 showing a step in a method of making a floating gate (*id.*, col. 2, ll. 37-40). This figure shows that the floating gate has sharp edges at opposite ends thereof.

Yeh's Figure 4-S-1 is reproduced below.

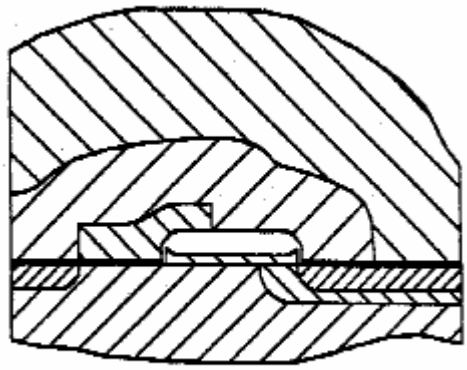

FIG. 4-S-1

Yeh's Figure 4-S-1 is a cross sectional side view showing the completed memory cell (*id.*, col. 13, ll. 21-24). It is apparent from this

figure that the sharp edges of the floating gate are located at the first and second edges of the floating gate as measured along its length in the direction between the source and drain regions, which we refer to hereinafter as "the channel conduction direction." As explained below, in Appellants' device the tip of the floating gate is *spaced from* the first and second edges of the floating gate in the channel conduction direction.

Figures 2a-2o of Appellants' application show various stages in the development of a prior-art device having a floating gate with an injection tip. *Id.* at [0008]. As will appear, the tip in this prior art-device is located *at* an edge of the floating gate as measured in the channel conduction direction.

Figure 2g is reproduced below.

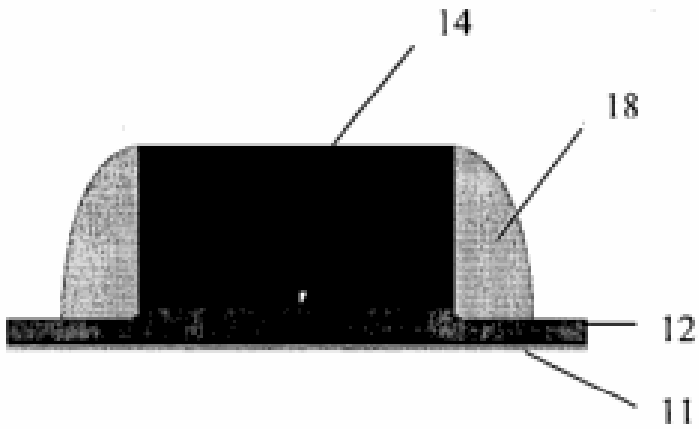

Fig. 2g (prior art)

The structure depicted in Figure 2g includes an oxide layer 11 (*id.* at [0016]) on a substrate 10 (*see* Fig. 2a), a polysilicon layer 12 (*id.* at [0011]), a nitride layer 14 (*id.*), and oxide spacers 18 (*id.* at [0013]).

As best shown in Figure 2d, reproduced below, the surface regions of nitride layer 12 adjacent to the vertical walls of nitride layer 14 are sloped (*id.* at [0011]).

Fig. 2d (prior art)

As explained below, these sloping surface regions become surfaces of injector tips.

Figure 2l is reproduced below.

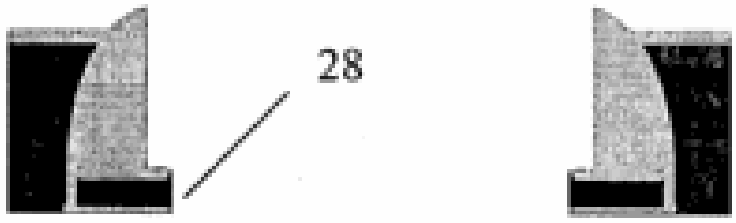

Fig. 2l (prior art)

This figure shows the two structures that result from further processing steps, including etching away the nitride region 14 and the central regions of polysilicon layer 12 and oxide layer 11, and forming a tip 28 at an end of the polysilicon layer 12 in each structure (*id.* at [0019].

Figure 2o is reproduced below.

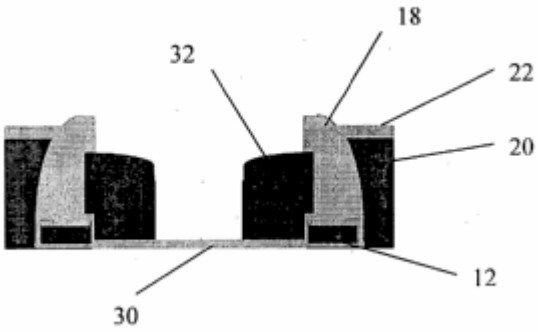

Fig. 2o (prior art)

This figure shows the two structures after the addition of a control gate 32 (*id.* at [0021]) and other elements. Ion implantation is used to form drain regions (not shown) between the control gates of the two structures (*id.*

at [0023]). The source regions (not shown) are formed in the substrate adjacent to oxide spacers 18 (*id.* at [0017]).

Figure 2p is reproduced below.

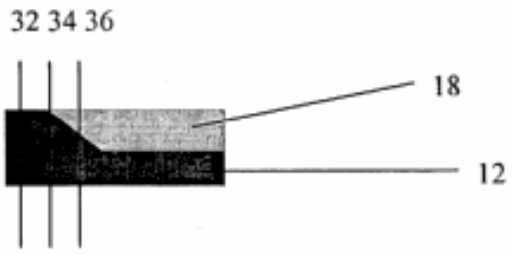

Fig. 2p

This figure, which depicts a portion of the right-hand structure depicted in Figure 2l, shows how the shape of tip varies with different lateral positions (32, 34, 36) of an etch line. As explained in paragraph [0024]:

> Ideally, a "perfect" tip 28 is formed when the anisotropic etch is performed along the line 34 as shown in Figure 2P. However, if the anisotropic cutting of the polysilicon 12 occurs along the line 32, as can be seen in Figure 2P, no "tip" results. As a result, a memory cell without a tip does not function as well as a memory with a tip 28 during the poly to poly tunneling erase operation. Of course if a cut occurred along the line 36, although a "tip" is formed, it is not as pronounced as the tip formed along line 34.

The statement that no "tip" results when etching occurs at line 32 reflects the fact that the claims require the tip to be "at the intersection of two downwardly sloping surfaces having an *acute* angle therebetween." *See, e.g.*, claim 1, Claims App., Br. 21 (emphasis added).

In Appellants' memory, on the other hand, the tip is spaced from an edge of the polysilicon layer 12, thereby making the tip shape immune to misalignment in the etching process (*id.* at [0057]). This feature of Appellants' floating gate structure is depicted in Figure 3u, reproduced below.

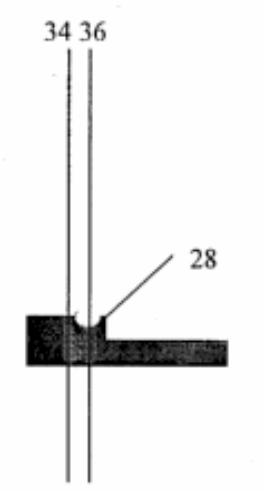

Fig. 3u

However, rather than referring to Figure 3u in its above unamended form, we will refer to that figure as proposed to be amended by Appellants[1] because the amended figure, reproduced below, includes additional reference numerals (90, 92) that facilitate discussion of the structure of tip 28.[2]

---

[1] "Response To Office Action Of April 12, 2006 [sic, 2007]," filed April 25, 2007, at 19 (faxing page no.).

[2] The Examiner has objected to the proposed addition of these reference numerals on the ground that they include new matter (Answer 3-4).

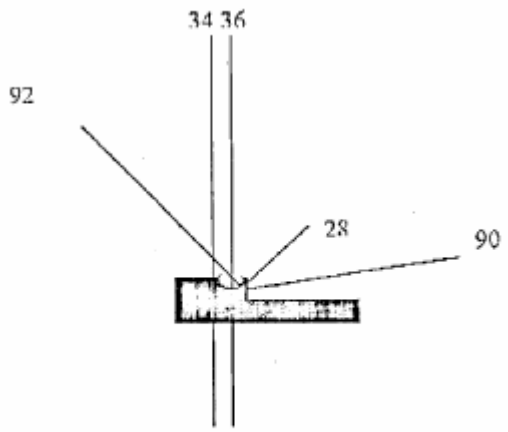

Fig. 3u

The wall that is designated by numeral 90 is formed by an etching process. Specifically, the application as filed explains that "[t]he etch may be isotropic or anisotropic resulting in either a sloped etch or a vertical etch." Specification at [0043]. Numeral 92 designates a surface area of a groove that is described in the application as filed as follows: "The wet etch of the polysilicon 12 creates a 'groove'. The resultant structure is shown in Figure 3K.").

Claims 1, 7, and 11 each specify that the tip (28) is "at the intersection of two downwardly sloping surfaces [90, 92] having an acute angle therebetween." This claim language was added by an Amendment filed May 19, 2005.[3] The Examiner found that this claim language lacks written

[3] "Response To Office Action Of April 5, 2005," at 2-4.

(Continued on next page.)

description support because the tip also has a horizontal top surface joining surfaces 90 and 92, with result that surfaces 90 and 92 do not intersect (Answer 4-5). As support, the Examiner provided (at Answer 14) the following enlarged, annotated view of tip 28 from Appellants' Figure 3u (omitting etch lines 34 and 36):

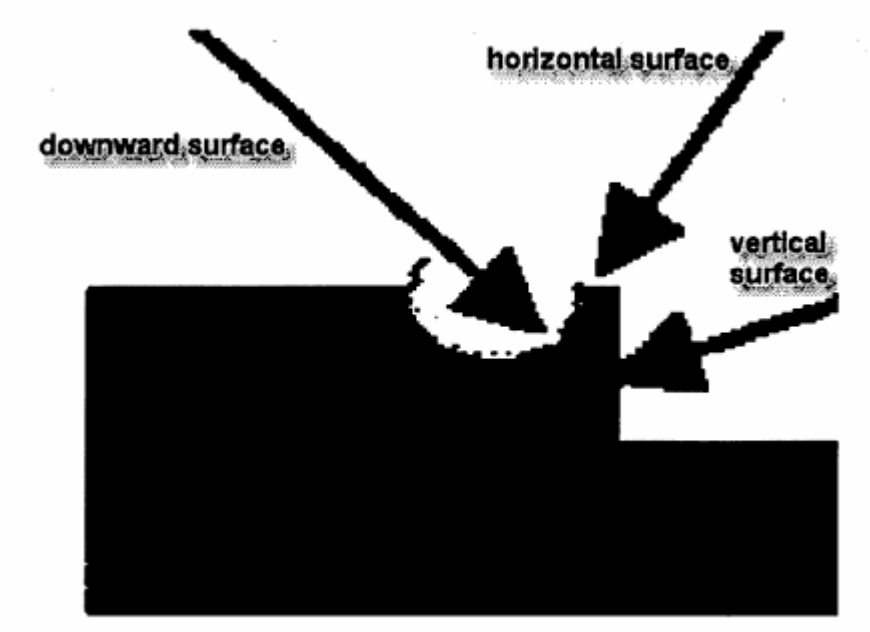

B. The claims

The independent claims are claims 1, 7, and 11, of which claim 1 reads:

> 1. An electrically programmable and erasable memory cell having:
>
> a semiconductor substrate of a first conductivity type;
>
> first and second spaced apart regions of a second conductivity type in said substrate, with a channel therebetween for the conduction of charges;
>
> a floating gate insulated and spaced apart from said substrate; said floating gate for storing charges and for controlling the conduction of charges in said channel, said floating gate having a tip for ejecting charges therefrom; said tip being at the intersection of two downwardly sloping surfaces having an acute angle therebetween;
>
> a control gate insulated and spaced apart from said substrate and said floating gate;
>
> wherein said improvement comprising:
>
> said floating gate having a length in a direction between said first and second regions, said length having a first end and a second end with said first end having a first edge and said second end having a second edge with said tip spaced apart from said first edge and said second edge.

C. The references

Forbes	US 2005/0281069 A1	Dec. 22, 2005
Hopper et al. (Hopper)	US 6,528,844 B1	Mar. 4, 2003

D. The rejections and objections

The basis for the rejection of claims 1-17 under § 112, first paragraph has already been described, as has the Examiner's objection to the proposed

drawing amendments. The Examiner has also objected to the aforementioned April 25, 2007, Amendment for introducing new matter into paragraphs [0043] and [0047] of the Specification (Answer 4). Because all of the objections are directly related to the merits of the § 112 rejection, we will address the objections as well as that rejection. *See Manual of Patent Examining Procedure* § 608.04(c) (8th ed., rev. 7, July 2008) ("[W]here the alleged new matter is introduced into or affects the claims, thus necessitating their rejection on this ground, the question becomes an appealable one, and should not be considered on petition even though that new matter has been introduced into the specification also.").

Claims 1-4, 7, 8, and 10 stand rejected under 35 U.S.C. § 102(e) for anticipation by Hopper (Answer 5).

Claims 5, 6, and 9 stand rejected under § 103(a) for obviousness over Hopper (*id*. at 8).

Claims 11-17 stand rejected under § 103(a) for obviousness over Hopper in view of Forbes (*id*. at 9).

THE ISSUES

Generally speaking, the issue is whether Appellants have shown reversible error by the Examiner in maintaining the rejections. *See In re Kahn*, 441 F.3d 977, 985-86 (Fed. Cir. 2006) ("On appeal to the Board, an applicant can overcome a rejection by showing insufficient evidence of *prima facie* obviousness or by rebutting the *prima facie* case with evidence

of secondary indicia of nonobviousness.") (quoting *In re Rouffet*, 149 F.3d 1350, 1355 (Fed. Cir. 1998)).

Regarding the new matter objection to the drawings, the specific issue is whether adding numerals to a drawing introduces new matter.

Regarding the new matter objection to paragraph [0043] of the Specification, the issue is whether a "vertical" wall is a "sloped" wall.

The new matter objection to paragraph [0047] involves the same issue as the § 112 new matter rejection, which is whether tip 28 in Appellant's Figure 3u is "at the intersection" of surfaces 90 and 92.

Regarding the § 102(e) rejection of claims 1-4, 7, 8, and 10, the issue is whether tip 230 in Hopper's Figure 2C is in the claimed location on the floating gate.

The § 103(a) rejection of claims 5, 6, and 9 based on Hopper alone is not separately argued.

Regarding the § 103(a) rejection of claims 11-17 based on Hopper in view of Forbes, the dispositive issue is whether Hopper's tip 230 is in the claimed location on the floating gate.

THE NEW MATTER OBJECTION TO THE DRAWING

A. Principles of law

As noted by the Examiner (Answer 4), 35 U.S.C. § 132(a) provides: "No amendment shall introduce new matter into the disclosure."

As stated *in Lockwood v. American Airlines, Inc.*, 107 F.3d 1565, 1572 (Fed. Cir. 1997):

> One shows that one is "in possession" of the invention by describing the invention, with all its claimed limitations, not that which makes it obvious. . . . One does that by such descriptive means as words, structures, figures, diagrams, formulas, etc., that fully set forth the claimed invention.

"[U]nder proper circumstances, drawings alone may provide a 'written description' of an invention as required by § 112." *Cooper Cameron Corp. v. Kvaerner Oilfield Prods., Inc.*, 291 F.3d 1317, 1322 (Fed. Cir. 2002) (quoting *Vas-Cath Inc. v. Mahurkar*, 935 F.2d 1555, 1565 (Fed. Cir. 1991)).

B. Analysis

The Examiner considers the proposed addition of numerals 90 and 92 to the drawings to be new matter because the associated descriptive material added by amendment to the Specification includes new matter. *See* Answer 12 ("[T]he drawings are objected to because numerals 90 and 92, which are the 'sloping surfaces', introduce new matter into the specification."). We agree with Appellants that adding reference numerals 90 and 92 to designate features that are already present in the drawings will not introduce new matter into the drawings. Reply Br. 2.

C. Conclusion

Appellants have demonstrated that amending the drawings to include numerals 90 and 92 will not introduce new matter into the drawings.

THE NEW MATTER OBJECTION TO PARAGRAPH [0043]

A. Analysis

The material added to paragraph [0043] that the Examiner found to be new matter (Answer 4) is underlined below:

> [0043] Using the oxide spacer 42 as a mask, the polysilicon 12 is partially anisotropically etched. The etch may be isotropic or anisotropic resulting in either a sloped etch or a vertical etch, <u>resulting in a first downward sloping surface 90</u>. The resultant structure is shown in Figure 3G.

Appellants responded to the objection by arguing that "[i]t is common sense and general knowledge that 'vertical' means the existence of a downward sloping surface." Br. 10. The Examiner countered:

> The term "vertical" does not mean "the existence of a downward sloping surface". The term "slope" means "taking oblique course", and "oblique" means "neither perpendicular nor parallel". Therefore, the term "slope" means "taking a course which is neither perpendicular nor parallel". This is in contradiction to appellant's argument that the term "slope" means "vertical" ("perpendicular").

Answer 12. Although the Examiner did not cite a dictionary or other authority for the above definition of "slope," we find that it is consistent with paragraph [0043] of the Specification, quoted above, which distinguishes between "vertical" and "sloped" by calling for "either a sloped etch or a vertical etch." The Examiner's definition of "slope" is also

supported by the definition of "slope" in *Webster's II New College Dictionary* ("*Webster's*") 1039 (2001) to mean "*vi*. **1**. To incline upward or downward. **2**. To ascend or descend on a slanting course" when considered with the definition of "incline" to mean "*vi*. **1**. To deviate from a horizontal or vertical : SLANT." *Webster's* 560.[4]

It is therefore apparent that the Examiner's reason for objecting to the underlined language is that it contradicts the definition of "sloped," which excludes a vertical surface, by characterizing vertical surface 90 as a type of "sloped" surface.[5] Appellants have not responded to the Examiner's reasoning, instead arguing:

> Paragraph [0043] merely stated that as result of the etch process "a sloped etch or a vertical etch" results, which applicants have termed "first downward sloping surface 90." The "first
>
> downward sloping surface 90" refers to either the sloped etch or the vertical etch. Thus, there is no contradiction.

Reply Br. 3.

B. Conclusion

---

[4] Copies of the cited *Webster's* pages are enclosed.

[5] The Examiner's statement that "[t]he original specification also supports a vertical etch, but not 'a first downward sloping surface', as discussed above" (Answer 13) is not understood, because paragraph [0043] explains that the etch can be sloped or vertical.

Appellants have not shown that the Examiner erred in objecting to the amendment of paragraph [0043] for introducing new matter.

THE NEW MATTER OBJECTION TO PARAGRAPH [0047]

A. Analysis

Paragraph [0047] was amended by adding the language that we have either underlined or italicized below. The Examiner has objected to only the underlined language:

> [0047] The structure shown in Figure 3J is then subject to a wet etch of polysilicon 12. This results in the etching of only the polysilicon 12 that is between the silicon nitride 44 and the silicon nitride 14, since the rest of the polysilicon 12 is covered. The wet etch of the polysilicon 12 creates a "groove", *resulting in a second downward sloping surface 92 shown in greater detail in Figure 3U*. <u>Thus, a tip 28 having an acute angle is formed between the first downward sloping surface 90 and the second downward sloping surface 92</u>. The resultant structure is shown in Figure 3K.

April 25, 2007, Amendment at 2 (some underlining replaced with italics).[6] The underlined language is similar to the claim language the Examiner found to be new matter, i.e., "said tip being at the intersection of two

[6] Not only did the Examiner fail to object to the addition of the italicized material characterizing the groove as "downward sloping surface 92 shown in greater detail in Figure 3U," the Examiner found that the "original specification supports a second downward sloping surface" (Answer 13) and thus presumably agrees with Appellants that surface 92 of the groove constitutes a "downward sloping surface."

downwardly sloping surfaces having an acute angle therebetween." *See, e.g.*, claim 1, Claims App., Br. 21. Because neither the Examiner nor Appellants argue any distinction between the disputed language of paragraph [0047] and the disputed claim language, we will treat the objection to the former as standing or falling with our disposition of the § 112 rejection, addressed below.

B. Conclusion

The objection to paragraph [0047] stands or falls with the § 112 rejection.

THE § 112, FIRST PARAGRAPH REJECTION

A. Analysis

In the Answer, the Examiner explained:

> The examiner agrees with appellant that figure 3u clearly shows that tip 28 is bounded on one side by the vertical surface and the other side by a groove, which has a downwardly sloping curved surface. However, tip 28 is not at the intersection [or junction] of this vertical surface and the downwardly sloping curve surface, because the vertical surface and the downwardly sloping curved surface of the groove are separated by a horizontal surface as is clearly depicted in figure 3u (see enlarged figure 3u above).
>
> Two lines or surfaces intersect when they meet and cross at a point, or when they share a common area. In this case, the two surfaces are clearly distanced from each other and separated by a horizontal surface. The two surfaces do not meet.

Answer 15 (alteration in original).

Appellants argue that the Examiner's finding that surfaces 90 and 92 are connected by a horizontal surface is erroneous for two reasons, both of which we find unpersuasive. First, Appellants argue that "[t]he greatly enlarged Figure 3U is nearly ten times (10X) greater than the originally filed drawing of Figure 3U, greatly distorting the disclosure. The figure shown by the examiner in the Examiner's Answer is NOT what is in the original disclosure." Reply Br. 4. This argument is unpersuasive because the horizontal surface mentioned by the Examiner is clearly visible in the unenlarged version of Figure 3u.

Second, Appellants argue that the Specification "specifically calls out for a tip 28 being at a junction of the two sloping surfaces" (*id*.), quoting paragraph [0057] as follows:

> [0057] The advantage of the method of the present invention can be seen with reference to Fig. 3u which is an enlarged cross-sectional view of a portion of the structure shown in Figure 3s, prior to the structure being subject to a polysilicon anisotropic etch. Line 34 is the cut if there were perfect alignment in the anisotropic etching process. As can be seen, if the anisotropic etch were made along line 34, the ***tip*** 28 remains unchanged. Further, even if there is mis-alignment in the anisotropic etch, such as to line 36, the ***tip*** 28 still remains. Therefore, because the ***tip*** is not formed at one of the "ends" of the polysilicon 12, the ***tip*** is immune to mis-aligment in the etching process. Thus, with the method of the present invention, a non-volatile memory cell will have an injector ***"tip"*** even if there is process mis-alignment.

Reply Br. 4. Appellants' reliance on this paragraph is misplaced because it does not explain which surfaces define the tip and thus is consistent with the depiction of tip 28 in Figure 3u as having a horizontal top surface.

B. Conclusion

Appellants have not shown that the Examiner erred in (1) finding that the application as filed fails to describe tip 28 as being at the intersection of surfaces 90 and 92 and (2) accordingly rejecting claims 1-17 under § 112, first paragraph and objecting to the corresponding amendatory language in paragraph [0047] as containing new matter.

THE § 102(e) REJECTION – IS HOPPER'S
TIP 320 IN THE CLAIMED LOCATION?

A. Principles of law

"To anticipate a claim, a prior art reference must disclose every limitation of the claimed invention, either explicitly or inherently." *In re Schreiber*, 128 F.3d 1473, 1477 (Fed. Cir. 1997).

Appellants' sole argument against the § 102(e) rejection of independent claims 1 and 7 and their dependent claims 2-4, 8, and 9 for anticipation by Hopper is that Hopper's central tip 230, on which the Examiner reads the recited "tip," is not in the claimed location on the floating gate. Claim 1, as noted above, specifies that "said floating gate ha[s] a length in a direction between said first and second regions, said length having a first end and a second end with said first end having a first

edge and said second end having a second edge with said tip spaced apart from said first edge and said second edge."

B. Hopper's disclosure

Hopper discloses a split-gate flash memory cell with a tip in the middle of the floating gate (Hopper, title).

Hopper's Figures 2A-2C are reproduced below.

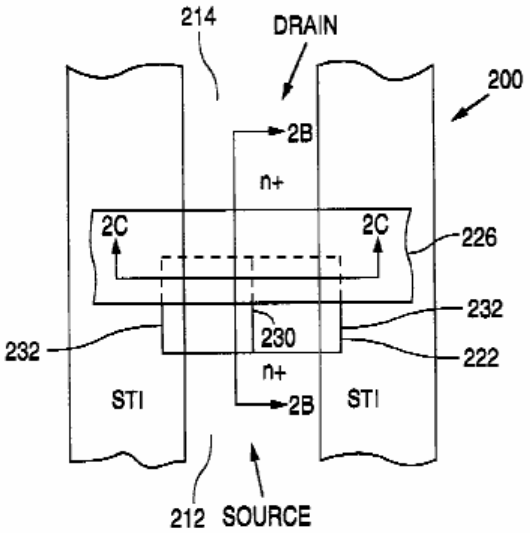

FIG. 2A

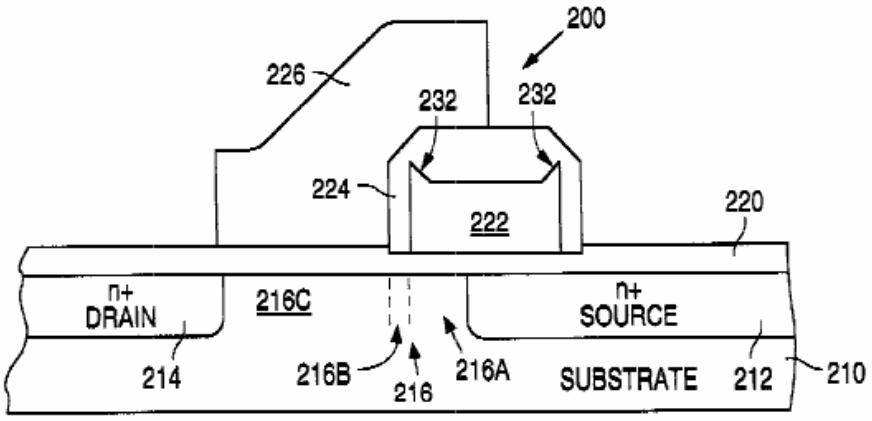

FIG. 2B

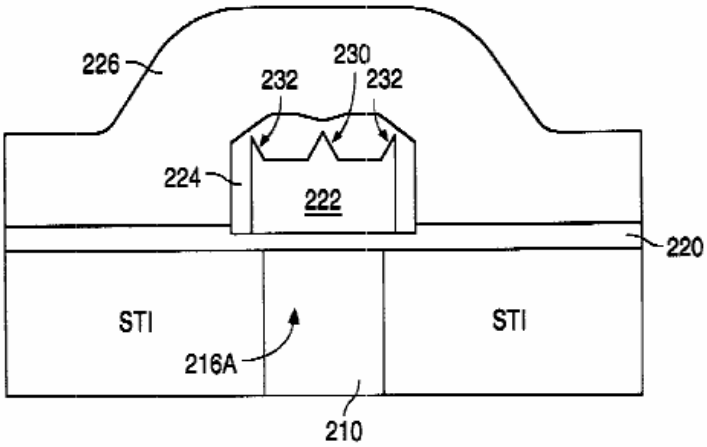

FIG. 2C

Figures 2A-2C illustrate the structure of a memory cell 200 in accordance with Hopper's invention, with Figure 2A being a plan view, Figure 2B being a cross-sectional view taken along line 2B--2B of Figure

2A, and Figure 2C being a cross-sectional view taken along line 2C--2C of Figure 2A.

As shown best in Figure 2C, floating gate 222 includes a central tip 230 and two outer tips 232 (*id*., col. 4, ll. 38-39) at opposite edges of the floating gate, which as shown in Figure 2A is rectangular in shape. Figure 2B, which is orthogonal to Figure 2C, shows two additional outer tips 232 at the other two edges of the floating gate. Thus, there are outer tips 232 at all four edges of the floating gate.

As pointed out by Appellants (Br. 14-15), it is apparent from Hopper's Figures 2A-2C that central tip 230 is not spaced from the edges of the floating gate in the channel conduction direction, as is the case in Appellants' disclosed memory device. Instead, Hopper's tip 230 is spaced from the edges of the floating gate in a direction that is perpendicular to the channel conduction direction.

The Examiner's position is that the claim language does not require that the recited "direction" for determining the position of the tip be the channel conduction direction and thus is broad enough to permit the recited "direction" to be perpendicular to the channel conduction direction. *See* Answer 17 ("The broad recitation of the claims does not require for the direction to be the direction extending from the first region to the second region (that is, the direction of the channel region."). The Examiner accordingly reads the recited tip and first and second edges on Hopper in the

manner shown in the following annotated copy of Hopper's Figure 2A at page 17 of the Answer:

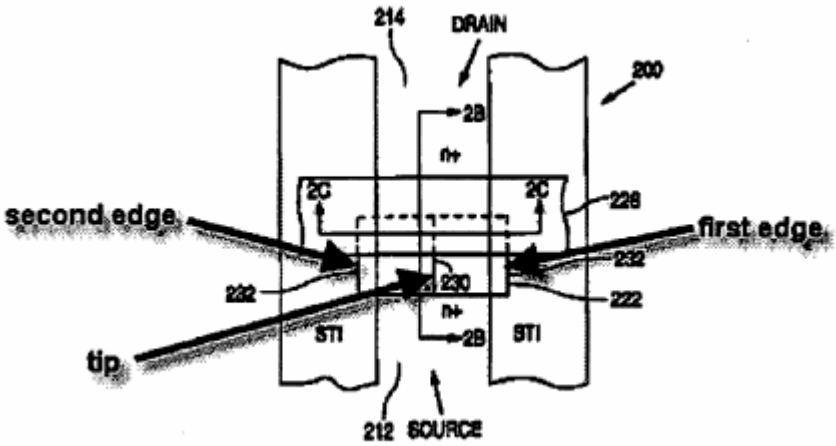

This position, as explained by the Examiner, also requires reading the recited "first region" and "second region" on the two shallow trench isolation (STI) regions and reading the recited "channel" on the channel region that is located between the STI regions (albeit for conducting between the source and drain regions). Answer 16. Appellants argue that the Examiner's position is incorrect because the claims require that the recited "direction" be the channel conduction direction. Br. 15.

We agree with the Examiner's position only insofar as claim 1 is concerned. Although that claim's recitation of "first and second spaced apart regions of a second conductivity type in said substrate, with a channel therebetween for the conduction of charges" requires the presence of a channel between the first and second regions, it does not further require that the channel be for (i.e., capable of) conducting charges *between those regions*. However, this additional requirement is placed on the channel by

claim 7, which recites "a channel between said first region and said second region for the conduction of charges therebetween."[7] Thus, the "direction" recited in claim 7 is the channel conduction direction, which runs vertically in Hopper's Figure 2A and runs left-to-right (or vice-versa) in Figure 2B. As shown in Figure 2A, when measured in the channel conduction direction, tip 230 extends from the recited first edge to the recited second edge of the floating gate rather than being spaced from either of those edges.

B. Conclusion

Appellants have not shown that the Examiner erred in finding that Hopper's tip 230 is in the location required by claim 1. Appellants have, however, shown that the Examiner erred in finding that Hopper's tip 230 is in the location required by claim 7.

Consequently, Appellants have not shown that the Examiner erred in rejecting claim 1 and its unargued dependent claims 2-4 for anticipation by Hopper, but Appellants have shown that the Examiner erred in rejecting independent claim 7 and its dependent claims 8 and 10 on that ground.

THE § 103(a) REJECTION OF CLAIMS 5, 6, AND 9

A. Analysis

[7] Claim 11, discussed below, similarly recites "a channel between said first region and said second region for conducting charges therebetween."

Claims 5 and 6, which depend indirectly on claim 1, and claim 9, which depends indirectly on independent claim 7, stand rejected for obviousness over Hopper alone. Appellants do not separately argue the merits of claims 5, 6, and 9, instead arguing that their rejection is improper for being based on the Examiner's erroneous finding that Hopper's tip 230 satisfies the location requirements of claims 1 and 7 (Br. 16-18), an argument that we found persuasive with respect to only claim 7, on which claim 9 ultimately depends.

B. Conclusion

Appellants have shown that the Examiner erred in rejecting claim 9 for obviousness over Hopper but have not shown that the Examiner erred in rejecting claims 5 and 6 on that ground.

THE § 103(a) REJECTION OF CLAIMS 11-17 –
IS HOPPER'S TIP IN THE CLAIMED LOCATION?

Independent claim 11 and its dependent claims 12-17 stand rejected for obviousness over Hopper in view of Forbes.

Claim 11 recites an array of memory devices each having many of the features required of a single memory device by claim 1 and also recites common connections of some elements of the devices in the array:

> 11. A semiconductor non-volatile memory device comprising:
>
> a semiconductor substrate of a first conductivity type;

> an array of non-volatile memory cells arranged in a plurality of rows and columns on said substrate, wherein each memory cell comprises:
>
> a first region of a second conductivity type in said substrate;
>
> a second region of a second conductivity type in said substrate, spaced apart from said first region;
>
> a channel between said first region and said second region for conducting charges therebetween;
>
> a floating gate insulated and spaced apart from said substrate for controlling the conduction of charges in said channel, said floating gate having a length between said first and second regions with a first end closest to said first region and a second end closest to said second region with a tip located between said first end and said second end, said tip being at the intersection of two downwardly sloping surfaces having an acute angle therebetween;
>
> a control gate insulated and spaced apart from said substrate and said floating gate, and positioned to receive charges ejected through said tip from said floating gate;
>
> wherein cells in the same column have said first region connected in common;
>
> wherein cells in the same row have said control gate connected in common; and
>
> wherein cells in the same row have said second region connected in common.

Claims App., Br. 23-24 (indentation modified).

The Examiner found that Hopper discloses all of the claim limitations except for the common connections. *See* Answer 9 ("Regarding claims 11-13, Hopper et al. teach in figure 2 and related text substantially the entire

claimed structure, as applied to claims 1 and 5 above, including an array of non-volatile memory cells arranged in a plurality of rows and columns on a substrate (column 2, lines 45-46). Hopper et al. do not teach that cells in the same column have said first region connected in common by the conductive layer, cells in the same row have said control gate connected in common by the metal word line, and cells in the same row have said second region connected in common.”).

Appellants argue that the rejection is improper because, *inter alia*, Hopper fails to satisfy the limitations of claim 1 for the reasons enumerated in discussion the rejection of that claim (Br. 18). One of those reasons is Appellants’ argument that “direction” in the independent claims means the channel conduction direction, an argument we found persuasive with respect to claim 7 but not with respect to claim 1.

For the following reasons, we also find that argument persuasive with respect to claim 11. As noted above, claim 11, like claim 7, requires that the recited “direction” be the channel direction, which is the direction that runs vertically in Figure 2A and runs left-to-right (or vice-versa) in Hopper’s Figure 2B. Also, although claim 11 specifies that the tip is “located between said first end and said second end” rather than reciting that the tip is “spaced apart from said first edge and said second edge,” as recited in claims 1 and 7, Appellants and the Examiner appear to agree that these are equivalent limitations. Specifically, in describing the subject matter of claim 11 at page 6 of the Brief, Appellants characterize that claim as requiring that tip be

"spaced apart from the first edge and the second edge." The Examiner has not expressed any disagreement with this characterization of the language of claim 11. In fact, the Examiner has characterized claim 11 as requiring that the tip be "spaced apart from" the first and second edges. *See* November 28, 2006, Office Action at 10 ("Claims 1, 7 and 11 never disclose[] the tip has to be between the ends in the channel direction. Claims 1, 7 and 11 only disclose the tip spaced apart from the first edge and the second edge, with a direction from the first edge to the second edge is perpendicular to a direction from the first region to said second region.").

As explained above in the discussion of claim 7, Figure 2A shows that when the position of tip 230 is measured in the channel conduction direction, it extends from the recited first edge to the recited second edge of the floating gate rather than being spaced from either of those edges. Consequently, we are reversing the rejection of claim 11 and its dependent claims 12-17.

It is therefore unnecessary to address Appellants' alternative argument that it would not have been obvious to modify Hopper in manner proposed by the Examiner, thereby satisfying the "connected in common" limitations (Br. 18-19).

B. Conclusion

Appellants have shown that the Examiner erred in finding that Hopper's tip 230 is in the position recited in claim 11 and thus that the

Examiner erred in rejecting claims 11-17 for obviousness over Hopper in view of Forbes.

DECISION

The 35 U.S.C. § 112, first paragraph rejection of claims 1-17 for lack of written description support is affirmed, as is the new matter objection to the disputed amendatory language in paragraph [0047] of the Specification. The objections to the amendatory language in paragraph [0043] and to the proposed amendments to the drawing are reversed.

The § 102(e) rejection of claims 1-4, 7, 8, and 10 based on Hopper is affirmed with respect to claims 1-4 and reversed with respect to claims 7, 8, and 10.

The § 103(a) rejection of claims 5, 6, and 9 based on Hopper alone is affirmed with respect to claims 5 and 6 and reversed with respect to claim 9.

The § 103(a) rejection of claims 11-17 based on Hopper in view of Forbes is reversed.

For the foregoing reasons, the Examiner's decision that claims 1-17 are unpatentable is affirmed.

No time period for taking any subsequent action in connection with this appeal may be extended under 37 C.F.R. § 1.136(a). *See* 37 C.F.R. §§ 41.50(f) and 41.52(b).

AFFIRMED

msc

DLA PIPER US LLP
2000 UNIVERSITY AVENUE
E. PALO ALTO, CA 94303-2248

Enclosures: *Webster's II New College Dictionary* 560, 1039 (2001)

Webster's II

New College Dictionary

Houghton Mifflin Company
Boston • New York

Words are included in this Dictionary on the basis of their usage. Words that are known to have current trademark registrations are shown with an initial capital and are also identified as trademarks. No investigation has been made of common-law trademark rights in any word, because such investigation is impracticable. The inclusion of any word in this Dictionary is not, however, an expression of the Publisher's opinion as to whether or not it is subject to proprietary rights. Indeed, no definition in this Dictionary is to be regarded as affecting the validity of any trademark.

Copyright © 2001, 1999, 1995 by Houghton Mifflin Company. All rights reserved.

No part of this work may be reproduced or transmitted in any form or by any means, electronic or mechanical, including photocopying and recording, or by any information storage or retrieval system without the prior written permission of Houghton Mifflin Company unless such copying is expressly permitted by federal copyright law. Address inquiries to Reference Permissions, Houghton Mifflin Company, 222 Berkeley Street, Boston MA 02116.

Illustrations **azimuthal equidistant projection** and **sinusoidal projection** © 1986 by The American Congress on Surveying and Mapping.

ISBN 0-395-96214-5

Library of Congress Cataloging-in-Publication Data

Webster's II new college dictionary.
p. cm.
ISBN 0-395-70869-9 (alk. paper)
1. English language – Dictionaries. I. Webster's II new Riverside University dictionary
PE1628.W55164 1995
423 – dc20 95-5833
CIP

For information about this and other Houghton Mifflin trade and reference books and multimedia products, visit the Houghton Mifflin website on the World Wide Web at http://www.houghtonmifflinbooks.com.

Printed in the United States

in·ci·den·tal (ĭn′sĭ-dĕn′tl) *adj.* **1.** Occurring or apt to occur as an unpredictable or minor concomitant <tie-ups *incidental* to heavy evening traffic> **2.** Of a minor, casual, or subordinate nature <*incidental* costs> —*n. often* **incidentals.** A minor concomitant circumstance, event, item, or expense.

in·ci·den·tal·ly (ĭn′sĭ-dĕn′tl-ē) *adv.* **1.** By chance : CASUALLY. **2.** (*also* ĭn′sĭ-dĕnt′lē). Apart from the main subject : PARENTHETICALLY.

incidental music *n.* Music played as an accompaniment to a dramatic work, as a play or film.

in·cin·er·ate (ĭn-sĭn′ə-rāt′) *v.* **-at·ed, -at·ing, -ates.** [Med. Lat. *incinerare, incinerat-* : Lat. *in-*, in + *cinis*, ashes.] —*vt.* To consume by burning. —*vi.* To burn or burn up. **—in·cin′er·a′tion** *n.*

in·cin·er·a·tor (ĭn-sĭn′ə-rā′tər) *n.* One that consumes by burning, esp. an apparatus for incinerating waste.

in·cip·i·ent (ĭn-sĭp′ē-ənt) *adj.* [Lat. *incipiens, incipient-*, pr.part. of *incipere*, to begin. —see INCEPTION.] Beginning to exist or appear <signs of *incipient* illness> **—in·cip′i·ence, in·cip′i·en·cy** *n.* **—in·cip′i·ent·ly** *adv.*

in·cise (ĭn-sīz′) *vt.* **-cised, -cis·ing, -cis·es.** [OFr. *inciser* < Lat. *incisus*, p.part. of Lat. *incidere* : *in-*, in + *caedere*, to cut.] **1.** To mark or cut into with a sharp instrument. **2. a.** To engrave (e.g., designs or writing) into a surface : CARVE. **b.** To engrave designs, writing, or other patterns into.

in·cised (ĭn-sīzd′) *adj.* **1.** Cut into : ENGRAVED. **2.** Made with or as if with a sharp instrument. **3.** Deeply notched : TOOTHED <the *incised* edge of a handsaw>

in·ci·sion (ĭn-sĭzh′ən) *n.* **1.** The act of incising. **2. a.** A surgical cut into soft tissue. **b.** The scar resulting from such a cut. **3.** A notch, as in the edge of a leaf. **4.** The quality of being incisive : TRENCHANCY.

in·ci·sive (ĭn-sī′sĭv) *adj.* **1.** Having or suggesting sharp intellect. **2.** Direct and effective : TELLING <an *incisive* summary of the report> **—in·ci′sive·ly** *adv.* **—in·ci′sive·ness** *n.*

★ ***syns:*** INCISIVE, ACUTE, BITING, CLEAR-CUT, PENETRATING, PERCEPTIVE, PROBING, SHARP, SHREWD, TRENCHANT *adj. core meaning* : having or suggesting keen, discerning intellect <an *incisive* analysis of the problem>

in·ci·sor (ĭn-sī′zər) *n.* A cutting tooth, at the apex of the dental arch.

in·ci·ta·tion (ĭn′sī-tā′shən) *n.* **1.** An act or instance of inciting : STIMULATION. **2.** Something that incites : INCENTIVE.

in·cite (ĭn-sīt′) *vt.* **-cit·ed, -cit·ing, -cites.** [OFr. *inciter* < Lat. *incitare*, to urge forward : *in-* (intensive) + *citare*, to stimulate, freq. of *ciēre*, to put in motion.] To provoke to action : GOAD. **—in·cite′ment** *n.* **—in·cit′er** *n.*

in·ci·vil·i·ty (ĭn′sĭ-vĭl′ĭ-tē) *n., pl.* **-ties. 1.** The quality or state of being uncivil. **2.** A rude or discourteous act.

in·clasp (ĭn-klăsp′) *v. var. of* ENCLASP.

in·clem·ent (ĭn-klĕm′ənt) *adj.* [Lat. *inclemens, inclement-*, harsh, severe : *in-*, not + *clemens*, mild.] **1.** Stormy. **2.** Severe : unmerciful. **—in·clem′en·cy** *n.* **—in·clem′ent·ly** *adv.*

in·clin·a·ble (ĭn-klī′nə-bəl) *adj.* **1.** Favorably disposed : AMENABLE. **2.** Having a tendency to do something.

in·cli·na·tion (ĭn′klə-nā′shən) *n.* **1.** An attitude or disposition toward something. **2.** A trend or general tendency toward a particular aspect, condition, or character. **3.** Something for which one has a preference or leaning <an *inclination* to eat too much chocolate> **4.** The act of inclining, as a bow. **5.** The state of being inclined : TILT. **6. a.** A deviation from a horizontal or vertical direction. **b.** The degree of deviation from a horizontal or vertical.

in·cline (ĭn-klīn′) *v.* **-clined, -clin·ing, -clines.** [ME *enclinen* < OFr. *encliner* < Lat. *inclinare* : *in-*, toward + *clinare*, to lean.] —*vi.* **1.** To deviate from a horizontal or vertical : SLANT. **2.** To be disposed to a given preference, opinion, or disposition. **3.** To lower or bend the head or body, as in a nod or bow. —*vt.* **1.** To cause to lean, slant, or slope. **2.** To influence to have a certain tendency : DISPOSE <Previous experience *inclined* them to be wary.> **3.** To bend or lower in a nod or bow. —*n.* (ĭn′klīn′). An inclined surface. **—in·clin′er** *n.*

in·clined (ĭn-klīnd′) *adj.* **1.** Having a preference, disposition, or tendency. **2.** Sloping, slanting, or leaning.

inclined plane *n.* A plane slanted to the horizontal, a simple machine used to raise or lower a load by rolling or sliding.

in·cli·nom·e·ter (ĭn′klə-nŏm′ĭ-tər) *n.* **1.** An instrument for determining magnetic dip. **2.** An instrument for showing the inclination of an aircraft or ship relative to the horizontal. **3.** A clinometer.

in·close (ĭn-klōz′) *v. var. of* ENCLOSE.

in·clude (ĭn-klōod′) *vt.* **-clud·ed, -clud·ing, -cludes.** [ME *includen* < Lat. *includere*, to enclose : *in-*, in + *claudere*, to close.] **1.** To have or take in as a part or member : CONTAIN. **2.** To put into a group, class, or total. **—in·clud′a·ble, in·clud′i·ble** *adj.*

in·clud·ed (ĭn-klōō′dĭd) *adj.* **1.** *Bot.* Not protruding beyond a surrounding part, as stamens that do not project from a corolla. **2.** Formed by and between two intersecting straight lines <an *included* angle>

in·clu·sion (ĭn-klōō′zhən) *n.* [Lat. *inclusio* < *inclusus*, p.part. of *includere*, to enclose. —see INCLUDE.] **1.** The act of including or state of being included. **2.** Something included. **3.** A solid, liquid, or gaseous foreign body enclosed in a mineral or rock. **4.** *Biol.* A nonliving mass in cytoplasm. **5.** *Computer Sci.* A logical operation assuming that the second statement of a pair is true if the first one is true.

inclusion body *n.* An abnormal structure in a cell nucleus or cytoplasm having typical staining properties and associated esp. with the presence of filterable viruses.

in·clu·sive (ĭn-klōō′sĭv) *adj.* **1.** Taking much or everything within its scope : COMPREHENSIVE. **2.** Including the specified extremes or limits as well as the area between them <the numbers one to ten, *inclusive*> **—in·clu′sive·ly** *adv.* **—in·clu′sive·ness** *n.*

inclusive of *prep.* Taking into consideration or account.

in·co·er·ci·ble (ĭn′kō-ûr′sə-bəl) *adj.* Incapable of coercion.

in·cog·i·tant (ĭn-kŏj′ĭ-tənt) *adj.* [Lat. *incogitans, incogitant-* : *in-*, not + *cogitans*, pr.part. of *cogitare*, to think. —see COGITATE.] Inconsiderate : thoughtless.

in·cog·ni·ta (ĭn-kŏg′nĭ-tə, ĭn′kŏg-nē′tə) *adj.* & *adv.* [Ital., fem. of *incognito*, incognito.] With one's identity disguised or hidden. —Used of a woman. **—in·cog′ni·ta** *n.*

in·cog·ni·to (ĭn-kŏg′nĭ-tō′, ĭn′kŏg-nē′tō) *adj.* & *adv.* [Ital. < Lat. *incognitus*, unknown : *in-*, not + *cognitus*, p.part. of *cognoscere*, to learn. —see COGNITION.] With one's identity disguised or hidden. —*n.* **1.** One who is incognito. **2.** The state of being incognito.

in·cog·ni·zant (ĭn-kŏg′nĭ-zənt) *adj.* Lacking awareness or knowledge of something : UNAWARE.

in·co·her·ent (ĭn′kō-hîr′ənt) *adj.* **1.** Lacking order, connection, or harmony. **2.** Unable to think or express one's thoughts in a clear or orderly manner. **—in′co·her′ence, in′co·her′en·cy** *n.* **—in′co·her′ent·ly** *adv.* **—in′co·her′ent·ness** *n.*

in·com·bus·ti·ble (ĭn′kəm-bŭs′tə-bəl) *adj.* [ME < Med. Lat. *incombustibilis* : Lat. *in-*, not + Lat. *combustus*, p.part. of *comburere*, to burn up. —see COMBUSTION.] Incapable of burning. **—in′com·bus′ti·bil′i·ty** *n.* **—in′com·bus′ti·ble** *n.* **—in′com·bus′ti·bly** *adv.*

in·come (ĭn′kŭm′) *n.* [ME, enhance, arrival : *in*, in + *comen*, to come.] **1.** Money or its equivalent received during a time period in exchange for labor or services, from the sale of goods or property, or in profit from financial investments. **2.** *Archaic.* An influx.

income tax *n.* A tax levied on net income of a business or an individual.

in·com·ing (ĭn′kŭm′ĭng) *adj.* **1.** Coming in : ENTERING. **2.** About to come in <the *incoming* administration> —*n.* **1.** The act of coming in : ARRIVAL. **2.** *often* **incomings.** Revenue : income. **3.** *Slang.* An airborne missile or artillery shell about to strike one's position.

in·com·men·su·ra·ble (ĭn′kə-mĕn′sər-ə-bəl, -shər-) *adj.* **1. a.** Incapable of being measured. **b.** Without a common quality upon which to make a comparison. **2.** *Math.* Having no common measure. —*n.* Something incommensurable. **—in′com·men′su·ra·bil′i·ty** *n.* **—in′com·men′su·ra·bly** *adv.*

in·com·men·su·rate (ĭn′kə-mĕn′sər-ĭt, -shər-) *adj.* **1. a.** Not commensurate : DISPROPORTIONATE <punishment *incommensurate* with the crime> **b.** Inadequate. **2.** Incommensurable. **—in′com·men′su·rate·ly** *adv.* **—in′com·men′su·rate·ness** *n.*

in·com·mode (ĭn′kə-mōd′) *vt.* **-mod·ed, -mod·ing, -modes.** [Fr. *incommoder* < OFr. < Lat. *incommodare* < *incommodus*, inconvenient : *in-*, not + *commodus*, convenient. —see COMMODIOUS.] To cause to be inconvenienced : DISTURB.

in·com·mo·di·ous (ĭn′kə-mō′dē-əs) *adj.* Inconvenient or uncomfortable, as by not offering sufficient space. **—in′com·mo′di·ous·ly** *adv.* **—in′com·mo′di·ous·ness** *n.*

in·com·mod·i·ty (ĭn′kə-mŏd′ĭ-tē) *n., pl.* **-ties. 1.** Inconvenience. **2.** Something inconvenient.

in·com·mu·ni·ca·ble (ĭn′kə-myōō′nĭ-kə-bəl) *adj.* Not communicable. **—in′com·mu′ni·ca·bil′i·ty** *n.* **—in′com·mu′ni·ca·bly** *adv.*

in·com·mu·ni·ca·do (ĭn′kə-myōō′nĭ-kä′dō) *adj.* [Sp., p.part. of *incomunicar*, to deny communication : *in-*, not (< Lat.) + *comunicar*, to communicate < Lat. *communicare* < *communis*, common.] Without the right or means of communicating with others, as one held in solitary confinement. **—in′com·mu′ni·ca′do** *adv.*

in·com·mu·ni·ca·tive (ĭn′kə-myōō′nĭ-kā′tĭv, -kə-tĭv) *adj.* Not communicative. **—in′com·mu′ni·ca′tive·ly** *adv.* **—in′com·mu′ni·ca′tive·ness** *n.*

in·com·mut·a·ble (ĭn′kə-myōō′tə-bəl) *adj.* **1.** Incapable of being traded or exchanged. **2.** Unalterable. **—in′com·mut′a·bil′i·ty, in′com·mut′a·ble·ness** *n.* **—in′com·mut′a·bly** *adv.*

in·com·pa·ra·ble (ĭn-kŏm′pər-ə-bəl) *adj.* **1.** Incapable of being compared. **2.** Without equal or rival : UNIQUE. **—in·com′pa·ra·bil′i·ty, in·com′pa·ra·ble·ness** *n.* **—in·com′pa·ra·bly** *adv.*

in·com·pat·i·bil·i·ty (ĭn′kəm-păt′ə-bĭl′ĭ-tē) *n., pl.* **-ties. 1.** The quality or state of being incompatible. **2. incompatibilities.** Mutually exclusive or antagonistic qualities or things.

in·com·pat·i·ble (ĭn′kəm-păt′ə-bəl) *adj.* [Med. Lat. *incompatibilis* : *in-*, not (< Lat.) + *compatibilis*, compatible.] **1.** Not in harmony or agreement : INCONGRUOUS. **2.** Incapable of being held simultaneously by one person, as offices. **3.** *Logic.* Incapable of being simultaneously true : mutually exclusive. —*n. often* **incompatibles.**

ng, slimes. 1. To smear with slime. 2. To
om fish to be canned.
ne mold.
f various fungi of the class Myxomycetes,
nsisting of a slimy, motile, multinucleate

nās′tĭks) *n.* [SLIM + (GYM)NASTICS.] (*sing.*
al exercises designed to facilitate weight
slimp·sy (slĭmp′sē) *adj.* **-si·er, -si·est.**
M and FLIMSY.] Frail and flimsy.
·er, -i·est. 1. Made up of or like slime
or exuding slime. 3. Vile : foul. **—slim′i·ly**
.

l. a. A weapon composed of a looped strap
d and then let fly. b. A slingshot. 2. A loop
r supporting, cradling, or hoisting, esp.
ld a shoe in place. b. A strap for carrying a
ut. A rope or chain for supporting a yard.
e neck to support an injured arm or hand.
vt. **slung** (slŭng), **sling·ing, slings.** 1. To
a sling : FLING. 2. To place or carry in a sling
means of a sling. 4. To let swing loosely

nknown.] A drink of brandy, whiskey, or gin,
on-flavored.
:′) *n.* A Y-shaped stick with an elastic strap
used for flinging small stones.
(slŭngk), **slink·ing, slinks.** [ME *slynken* <
ove quietly and furtively : SNEAK. —*vt.* To
y. —Used esp. of cows. —*n.* An animal, esp.
y. —*adj.* That has been born prematurely.

-i·er, -i·est. 1. Stealthy : furtive. 2. *Infor.*
and sleek <a *slinky* gown>
, slip·ping, slips. [ME *slippen*, prob. <
ve smoothly and quietly : GLIDE. b. To move
adually, easily, or imperceptibly <The years
de unexpectedly and by accident. b. To slide
ipped.> c. To escape, as from a grip <The dog
> 4. To get away completely. 5. *Informal.* To
ental ability, strength, or keenness. 6. *Infor.*
FF <Your work is *slipping.*> 7. To fall behind
ate. 8. To fall into fault or error. —*vt.* 11. To
th, easy, or sliding motion <*slipped* the bolt
r insert smoothly and quietly. 3. To put on or
y or easily <*slip* on a jacket> <*slip* off one's
rom. 5. To bring forth (young) prematurely.
o unleash or free (a dog or hawk) to pursue
lip the knot> 8. To dislocate (a bone). 9. To
m one needle to another without knitting it.
ng or sliding. 2. An accident or mishap, esp.
rror in conduct or thinking : DEVIATION. b. A
s in speech or writing <a *slip* of the tongue>
a ship : PIER. b. A space for a ship between
A slipway. 5. The difference between a vel-
h water and the speed at which the vessel
were propelling against a solid. 6. A woman's
a lining for a dress. 7. A pillowcase. 8. *Geol.*
ich rock strata have moved on each other. 9.
erence between optimal and actual output in
Movement between two parts where none
a pulley and belt. 11. The sliding movement
attitudes. **—give (someone) the slip.**
rsuit of. **—let slip.** To say inadvertently.
nformal. To hoodwink or trick.
scion.] 1. A part of a plant cut or broken off
. A long narrow piece : STRIP. 3. A youthful
l piece of paper, esp. a small form <a sales
pew. —*vt.* **slipped, slip·ping, slips.** To
or plant part).
; slime < OE *slypa*, a soft mass.] Thinned
g or coating ceramics.
An open-ended protective box for a book.
r) *n.* A fitted, removable cover for uphol-
red, -er·ing, -ers. To provide with a slip-

1. A knot made with a loop so that it slips
rd around which it is tied. 2. A knot made
ntied by pulling one free end.
. A garment easily donned or removed.
. A garment that can be donned or removed

a. A slipping. b. The amount or extent of
n or power due to slipping.

slipped disk *n.* Herniation of an intervertebral disk resulting in back pain or sciatica.
slip·per (slĭp′ər) *n.* A light, low shoe slipped on and off easily.
slip·per·wort (slĭp′ər-wûrt′, -wôrt′) *n.* The calceolaria.
slip·per·y (slĭp′ə-rē) *adj.* **-i·er, -i·est.** [Alteration of obs. *slipper,* slippery < ME < OE *slipor.*] 1. Causing or tending to cause sliding or slipping. 2. Tending to slip, as from one's grasp <a *slippery* bar of soap> 3. Elusive : evasive. **—slip′per·i·ly** *adv.* **—slip′per·i·ness** *n.*
slippery elm *n.* A tree, *Ulmus rubra* of eastern North America, having twigs and leaves with a mucilaginous, aromatic juice once used medicinally.
slip ring *n.* A metal ring mounted on a rotating machine part to provide a continuous electrical connection through brushes on stationary contacts.
slip·sheet (slĭp′shēt′) *n.* A blank sheet of paper slipped between newly printed sheets to prevent offsetting. —*vt.* **-sheet·ed, -sheet·ing, -sheets.** To insert blank sheets between (printed sheets).
slip·shod (slĭp′shŏd′) *adj.* 1. Poorly made or done : CARELESS <*slipshod* work>. 2. Slovenly : shabby.
slip·slop (slĭp′slŏp′) *n.* [Redup. of SLOP.] 1. Trivial conversation or writing. 2. *Archaic.* Unappetizing liquid or watery food : SLOPS.
slip·stitch (slĭp′stĭch′) *n.* A stitch used wherever stitching must be invisible on the right side of a garment, as on hems and facings, made by picking up one or two threads of fabric and then loosely catching the needle in the hem edge.
slip·stream (slĭp′strēm′) *n.* 1. The turbulent flow of air driven backward by the propeller or propellers of an aircraft. 2. The region of reduced air pressure and forward suction produced by and just behind a fast-moving ground vehicle. —*vi.* **-streamed, -stream·ing, -streams.** To drive in the slipstream of a ground vehicle.
slip·up (slĭp′ŭp′) *n. Informal.* An error or oversight.
slip·way (slĭp′wā′) *n.* A sloping incline leading down to the water on which ships are built or repaired.
slit (slĭt) *n.* [ME *slitte.*] A long narrow cut, tear, or incision. —*vt.* **slit, slit·ting, slits.** 1. To make a long narrow incision in. 2. To cut lengthwise into strips : SPLIT.
slith·er (slĭth′ər) *v.* **-ered, -er·ing, -ers.** [ME *sliddren* < OE *slidrian,* freq. of *slīdan,* to slide.] —*vi.* 1. To slip and slide, as on a loose or uneven surface. 2. To move sinuously. —*vt.* To cause to slither or glide. —*n.* A slithering movement. **—slith′er·y** *adj.*
★ *syns:* SLITHER, SNAKE, UNDULATE *v. core meaning* : to move sinuously <A large worm *slithered* through the grass.>
slit trench *n.* A narrow, shallow trench dug during combat for the protection of a single soldier or a small group.
sliv·er (slĭv′ər) *n.* [ME *slifere* < *slyven,* to split.] 1. A slender piece cut, split, or broken off : SPLINTER. 2. A small, narrow piece or portion <a *sliver* of land along the river> 3. (*also* slī′vər). A continuous strand of loose wool, flax, or cotton, ready for drawing and twisting. —*vt.* & *vi.* **-ered, -er·ing, -ers.** To split or become split into slivers.
sliv·o·vitz (slĭv′ə-vĭts) *n.* [Serbo-Croatian *šljivovica* < *šljiva,* plum.] A dry, colorless plum brandy.
slob (slŏb) *n.* [Ir. Gael. *slab,* mud.] *Informal.* An obnoxious, crude, or slovenly person.
slob·ber (slŏb′ər) *v.* **-ber·ed, -ber·ing, -bers.** [ME *sloberen.*] —*vi.* 1. To allow saliva to dribble from the mouth : SLAVER. 2. To spill (liquid or food) from the mouth while eating or drinking. 3. To indulge in mawkish, sentimental expression. —*vt.* To wet or smear with or as if with saliva or food dribbled from the mouth. —*n.* 1. Saliva or liquid running from the mouth. 2. Mawkish, sentimental expression : DRIVEL. **—slob′ber·er** *n.* **—slob′ber·y** *adj.*
sloe (slō) *n.* [ME *sloo* < OE *slā.*] 1. The blackthorn. 2. The tart, blue-black, plumlike fruit of the sloe.
sloe-eyed (slō′īd′) *adj.* Having slanted eyes.
sloe gin *n.* A liqueur having a gin base, flavored with fresh sloes.
slog (slŏg) *v.* **slogged, slog·ging, slogs.** [Orig. unknown.] —*vt.* To strike with heavy blows, as in boxing. —*vi.* 1. To walk with a slow, plodding gait. 2. To work diligently for long hours. —*n.* 1. Long hard work. 2. A long exhausting march. **—slog′ger** *n.*
slo·gan (slō′gən) *n.* [Sc. *slogorne,* battle cry < Gael. *sluagh-ghairm* *sluagh,* host + *gairm,* shout.] 1. A phrase expressing the aims or nature of an enterprise or organization : MOTTO. 2. A battle cry of the Scottish clans. 3. A catch phrase used in advertising or promotion.
slo·gan·eer (slō′gə-nîr′) *n.* One that invents or uses slogans. **—slo′gan·eer′** *v.* **(-eered, -eer·ing, -eers).**
slo·gan·ize (slō′gə-nīz′) *vt.* **-ized, -iz·ing, -iz·es.** To express in the form of slogans.
sloop (slōōp) *n.* [Du. *sloep.*] *Naut.* A single-masted, fore-and-aft-rigged sailing boat with a short standing bowsprit or none at all and a single headsail set from the forestay.
sloop of war *n.* A small armed vessel larger than a gunboat, carrying guns on one deck only.
slop¹ (slŏp) *n.* [ME *sloppe,* a muddy place.] 1. Spilled or splashed liquid. 2. Soft slush or mud. 3. Unappetizing watery food. 4. *often* **slops.** Waste food used to feed pigs or other animals : SWILL. 5. *often* **slops.** Mash remaining after the process of alcohol distillation. 6. *often* **slops.** Human excrement. 7. Repulsively effusive expression. —*v.* **slopped, slop·ping, slops.** —*vi.* 1. To spill or splash, as a liquid. 2. To spill over. 3. To gush with excessive sentimentality. 4. To plod or tramp awkwardly as if walking through mud. —*vt.* 1. To spill (liquid). 2. To spill liquid upon. 3. To dish out or serve unappetizingly or clumsily. 4. To feed slops to (animals).
slop² (slŏp) *n.* [ME *sloppe,* a kind of garment.] 1. **slops.** Garments and bedding issued to sailors from a ship's stores. 2. **slops.** Short, full trousers or breeches worn in the 16th cent. 3. A loose outer garment, as a smock or overalls. 4. **slops.** *Chiefly Brit.* Cheap ready-made garments.
slope (slōp) *v.* **sloped, slop·ing, slopes.** [< ME *slope,* sloping.] —*vi.* 1. To incline upward or downward. 2. To ascend or descend on a slanting course. —*vt.* To cause to slope. —*n.* 1. An inclined line, surface, plane, position, or direction. 2. A stretch of ground forming a natural or artificial incline <ski *slopes*> 3. a. Deviation from the horizontal. b. The amount or degree of deviation from the horizontal. 4. *Math.* The rate at which an ordinate of a point of a line on a coordinate plane changes with respect to a change in the abscissa. 5. *Math.* The slope of the line tangent to a plane curve at a given point. **—slop′er** *n.* **—slop′ing·ly** *adv.*
slo-pitch (slō′pĭch′) *n. var. of* SLOW-PITCH.
slop·py (slŏp′ē) *adj.* **-pi·er, -pi·est.** 1. Of, like, or covered with slop : MUDDY <*sloppy* ground> 2. Watery and unappetizing <a *sloppy* stew> 3. Spotted or splashed with liquid or slop. 4. *Informal.* Untidy : messy <a *sloppy* room> 5. *Informal.* SLIPSHOD 1. 6. *Informal.* Oversentimental : gushy. **—slop′pi·ly** *adv.* **—slop′pi·ness** *n.*
sloppy joe (jō) *n.* Ground cooked meat in a usu. spicy sauce served on a bun.
slosh (slŏsh) *v.* **sloshed, slosh·ing, slosh·es.** [Alteration of SLUSH.] —*vt.* 1. To stir or splash (a liquid). 2. To agitate in a liquid <*slosh* clothes in bleach> —*vi.* To splash or flounder in a liquid, as water. —*n.* 1. Slush. 2. The sound of splashing liquid. **—slosh′y** *adj.*
sloshed (slŏsht) *adj.* [< p.part. of SLOSH.] *Slang.* Drunk.
slot¹ (slŏt) *n.* [ME, indentation running down the middle of the breast < OFr. *esclot.*] 1. A long narrow groove, opening, or notch, as for receiving coins in a vending machine. 2. A gap between a main and an auxiliary airfoil to provide space for airflow and facilitate the smooth passage of air over the wing. 3. *Informal.* A suitable position or niche. —*vt.* **slot·ted, slot·ting, slots.** 1. To cut or make a slot or slots in. 2. *Informal.* To put into or assign to a slot.
slot² (slŏt) *n.* [OFr. *esclot,* horse's hoofprint, perh. < ON *sloð,* track.] The trail of an animal, esp. a deer.
slot car *n.* An electric toy racing car that fits into a slotted track and is controlled by a rheostat held by the operator.
sloth (slôth, slōth, slŏth) *n.* [ME *slowth* < *slow,* slow < OE *slāw.*] 1. Aversion to exertion or work : LAZINESS. 2. A slow-moving arboreal mammal of the familyBradypodidae of tropical America, esp.: a. A member of the genus *Bradypus,* having three long-clawed toes on each foot. b. A member of the genus *Choloepus,* having two toes on the forefeet and three on the hind feet. 3. A company of bears.
sloth bear *n.* A bear, *Melursus ursinus* of south-central Asia, having a long snout and dark shaggy hair.
sloth·ful (slôth′fəl, slōth′-, slŏth′-) *adj.* Lazy. **—sloth′ful·ly** *adv.* **—sloth′ful·ness** *n.*
slot machine *n.* A vending or gambling machine operated by the insertion of coins into a slot.
slot racing *n.* The game of racing slot cars. **—slot racer** *n.*
slouch (slouch) *v.* **slouched, slouch·ing, slouch·es.** [Orig. unknown.] —*vi.* 1. To sit, stand, or walk with an awkward, drooping posture. 2. To droop or hang carelessly, as a hat. —*vt.* To cause to droop. —*n.* 1. A drooping posture. 2. An awkward, lazy, or inept person. **—slouch′i·ly** *adv.* **—slouch′i·ness** *n.* **—slouch′y** *adj.*
slouch hat *n.* A soft hat with a broad flexible brim.
slough¹ (slōō, slou) *also* **slew** (slōō) *n.* [ME *slogh* < OE *slōh.*] 1. A depression or hollow, usu. filled with deep mud or mire. 2. *also* **slue** (slōō). A stagnant swamp, marsh, bog, or pond, esp. as part of a bayou, inlet, or backwater. 3. Deep despair or moral degradation.
slough² (slŭf) *n.* [ME *slughe.*] 1. The dead outer skin shed by a snake or amphibian. 2. *Med.* Dead tissue separated from a living structure. 3. An outer layer or covering that is shed. —*v.* **sloughed, slough·ing, sloughs.** —*vi.* 1. To be cast off or shed. 2. To shed a slough. 3. *Med.* To separate from surrounding tissue. —Used of dead tissue. —*vt.* To discard as undesirable. **—slough′y** *adj.*
Slo·vak (slō′väk′, -väk′) *also* **Slo·va·ki·an** (slō-vä′kē-ən, -väk′ē-ən) *n.* [Slovak *Slovák.*] 1. A member of a Slavic people living in Slovakia. 2. The Slavic language of the Slovaks. —*adj.* Of or relating to Slovakia, the Slovaks, or their language.
slov·en (slŭv′ən) *n.* [ME *sloveyn.*] A slovenly person.
Slo·vene (slō′vēn′) *n.* 1. A native or inhabitant of Slovenia. 2. The Slavic language of Slovenia. **—Slo′vene′** *adj.*
slov·en·ly (slŭv′ən-lē) *adj.* Careless in personal appearance or work. **—slov′en·ly** *adv.*
slow (slō) *adj.* **-er, -est.** [ME < OE *slāw.*] 1. a. Not moving or ca-