UNITED STATES PATENT AND TRADEMARK OFFICE

BEFORE THE BOARD OF PATENT APPEALS
AND INTERFERENCES

Ex parte WON-CHEOL JEONG, HYEONG-JUN KIM, JAE-HYUN PARK,
and CHANG-WOOK JEONG

Appeal 2008-4351
Application 10/942,187
Technology Center 2800

Decided: December 22, 2008

Before JOHN C. MARTIN, ROBERT E. NAPPI, and
SCOTT R. BOALICK, *Administrative Patent Judges.*

MARTIN, *Administrative Patent Judge.*

DECISION ON APPEAL

STATEMENT OF THE CASE

This is an appeal under 35 U.S.C. § 134(a) from the Examiner's rejections of claims 1-3 and 6-11. Claims 4, 5, and 24-26, the remaining pending claims, stand withdrawn from further consideration. Final Action 2.

We have jurisdiction under 35 U.S.C. § 6(b).

We reverse.

A. Appellants' invention

Appellants' "Background of the Invention" describes a prior-art phase change memory device, depicted in Figure 1, reproduced below.

Fig. 1

(PRIOR ART)

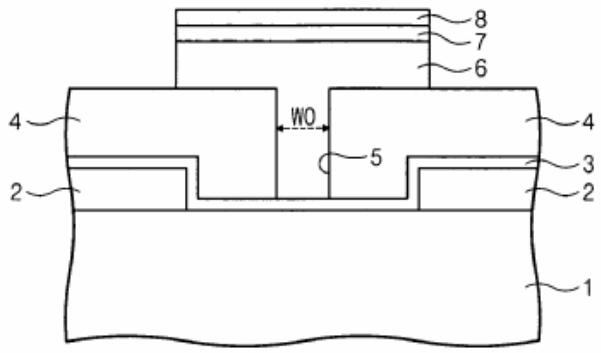

Figure 1 is a cross-sectional view of a conventional phase change memory device (Specification 2:24-25). As shown in this figure, a first heating layer 3 is disposed on a first dielectric layer 1, and a first electrical contact layer 2 is interposed between a portion of first heating layer 3 and first dielectric layer 1 (*id.*, 2:25-27). A second dielectric layer 4 covers first dielectric layer 3, and a contact hole 5 is formed to penetrate second dielectric layer 4 and to expose a predetermined region of first heating layer 3 (*id.*, 2:28-30). A phase change material layer 6 contacts first heating layer 3 through contact hole 5 and is disposed on second dielectric layer 4 (*id.*,

2:30-31). A second heating layer 7 and a second electrical contact layer 8 are sequentially stacked on phase change material layer 6 (*id.*, 2:31-33).

The amount of current flowing through contact hole 5 is controlled to convert a portion of phase change layer 6 neighboring the contact surface into an amorphous state or a crystalline state (*id.*, 3:3-6). The amount of operation current required to convert phase change material layer 6 into an amorphous state or a crystalline state depends on the area of the contact surface of phase change material layer 6 and first heating layer 3 (*id.*, 3:7-10). As the width W0 of the contact hole 5 decreases, the density of current flowing through contract hole 5 increases (*id.*, 3:10-12). Joule's heat increases in proportion to the current density (*id.*, 3:13). Consequently, as the width W0 of contact hole 5 decreases, the amount of operation current decreases (*id.*, 3:13-14). Conventionally, width W0 depends on a photolithographic pattern defined by the photolithographic process such that the minimum width of contact hole 5 typically depends on the minimum width limitation of the photolithographic process (*id.*, 3:15-18).

As explained below, in Appellants' phase change memory devices the contact surface area is defined by the sidewall of a hole in an electrode whose thickness can be made smaller than the aforementioned minimum line width.

Appellants' Figures 2 and 3 are reproduced below.

Fig. 2

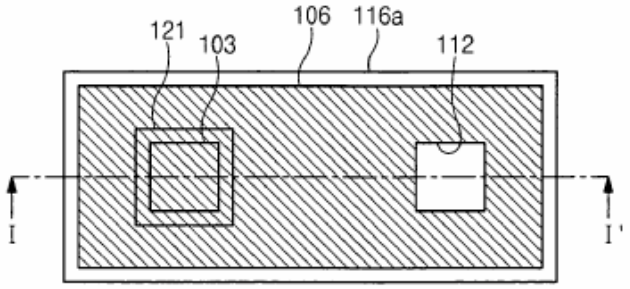

Fig. 3

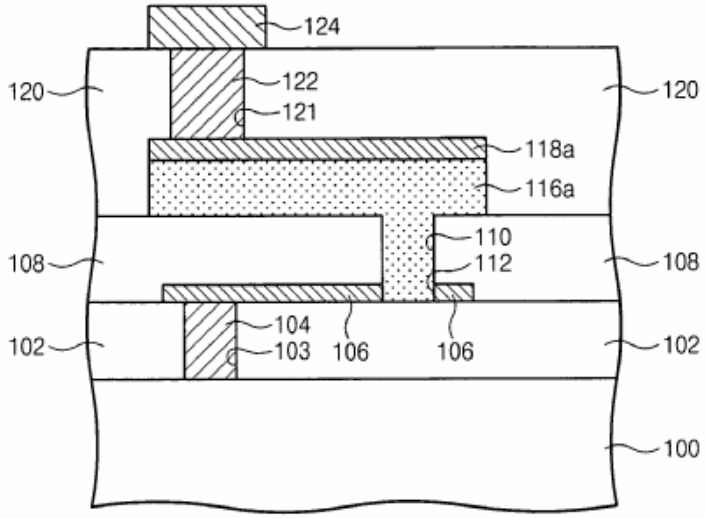

Figures 2 and 3 are plan and cross-sectional views, respectively, of an embodiment of Appellants' invention (*id.*, 6:19-21).

A dielectric layer 102 supports a heating electrode 106 that is covered by an insulating layer 108 (*id.*, 9:22-24) and includes an electrode hole 112

(*id.*, 9:4-8). Phase change material 116a extends through a guide hole 110 in insulation layer 108 and into electrode hole 112, thereby contacting the inner sidewall of electrode hole 112 (*id.*, 9:32 to 10:1).

The contact surface therefore depends on the thickness of the heating electrode 106 and the length of the perimeter of the electrode hole 112 (*id.*, 10:25-26). The thickness of the heating electrode 106 may be formed to be much thinner than the typical minimum line width defined by a conventional photolithography process, with the result that the area of the contact surface may be decreased in comparison to that of the conventional device. *Id.*, 10:26-30.

B. The claims

Claim 1 is the sole independent claim before us:

1. A phase change memory device, comprising:

> a heating electrode disposed on a substrate, the heating electrode including an electrode hole extending through the heating electrode; and
>
> a phase change material pattern in the electrode hole and contacting a sidewall of the electrode hole.

App. A to Brief.[1]

C. The references and rejections

---

[1] References herein to the Brief are to the September 7, 2007, "Amended Appeal Brief in Response to Notification of Non-Complaint Appeal Brief."

The Examiner relies on the following references:

Wicker	US 6,867,425 B2	Mar. 15, 2005 (filed Dec. 13, 2002)
Cho et al. (Cho)	US 7,026,639 B2	Apr. 11, 2006 (filed Dec. 15, 2003)

Claims 1-3 and 6-11 stand rejected under 35 U.S.C. § 102(e) for anticipation by each of Cho and Wicker. Answer 3, 6.

THE ISSUES

Generally speaking, the issue is whether Appellants have shown reversible error by the Examiner in maintaining the rejections. *See In re Kahn*, 441 F.3d 977, 985-86 (Fed. Cir. 2006) ("On appeal to the Board, an applicant can overcome a rejection by showing insufficient evidence of *prima facie* obviousness or by rebutting the *prima facie* case with evidence of secondary indicia of nonobviousness.") (quoting *In re Rouffet*, 149 F.3d 1350, 1355 (Fed. Cir. 1998)).

Appellants argue that Cho's electrode 45 (Figs. 4, 5A) cannot be characterized as "a heating electrode" and also that electrodes 41 and 45 cannot be collectively characterized as forming a heating electrode having a hole extending therethrough. Br. 3-5.

Regarding Wicker, Appellants deny that Wicker's electrodes 130 and 140 form a heating electrode having a hole extending therethrough. Br. 5-6.

Thus, the issues before us are:

1. Whether Cho's electrode 45 is "a heating electrode."

2. If the answer to Issue 1 is yes, whether Cho's electrodes 41 and 45 form a heating electrode having a hole extending therethrough.

3. Whether Wicker's electrodes 130 and 140 form a heating electrode having a hole extending therethrough.

PRINCIPLES OF LAW

"To anticipate a claim, a prior art reference must disclose every limitation of the claimed invention, either explicitly or inherently." *In re Schreiber*, 128 F.3d 1473, 1477 (Fed. Cir. 1997).

Application claims are interpreted as broadly as is reasonable and consistent with the specification, *In re Thrift*, 298 F.3d 1357, 1364 (Fed. Cir. 2002), while "taking into account whatever enlightenment by way of definitions or otherwise that may be afforded by the written description contained in the applicant's specification." *In re Morris*, 127 F.3d 1048, 1054 (Fed. Cir. 1997). It is improper to read limitations from a disclosed embodiment into the claims. *See Phillips v. AWH Corp.*, 415 F.3d 1303, 1323 (Fed. Cir. 2005) ("[A]lthough the specification often describes very specific embodiments of the invention, we have repeatedly warned against confining the claims to those embodiments."); *In re Priest*, 582 F.2d 33, 37 (CCPA 1978).

ISSUE 1: WHETHER CHO'S ELECTRODE 45
IS "A HEATING ELECTRODE"

A. The Cho patent

Cho discloses phase change memory elements (Cho, title). As in Appellants' memory cell, the contact surface area between a heating electrode and the phase change material is a function of the thickness of the heating electrode. Cho, col. 4, ll. 30-39.

Cho's Figures 2A and 2B are reproduced below.

FIG. 2A

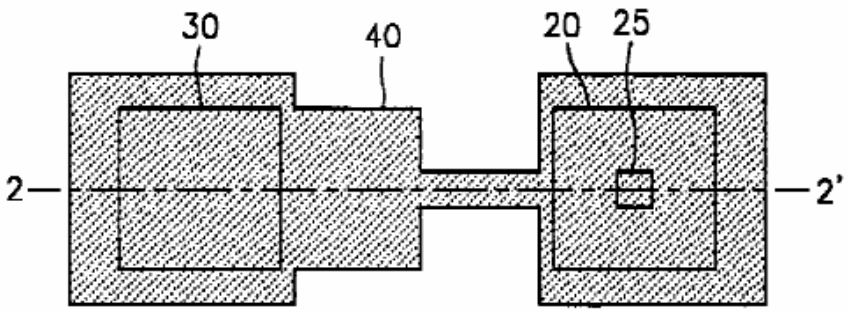

FIG. 2B

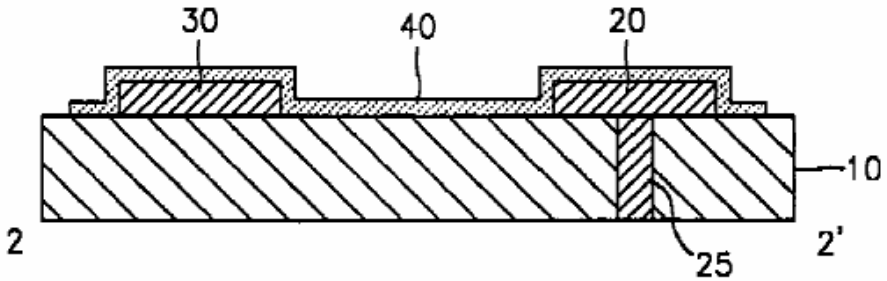

Cho's Figures 2A and 2B are plan and cross-sectional views showing an intermediate stage in the formation of one of Cho's memory elements

(*id.*, col. 5, ll. 25-27). These views show a first insulating layer 10, first and second electrode pads 20 and 30, and an electrode layer 40 (*id.*, col. 28-30). Insulating layer 10 has a first contact hole containing a first interconnection contact 25 (*id.*, col. 5, ll. 1-3).

Figures 3A and 3B are reproduced below.

FIG. 3A

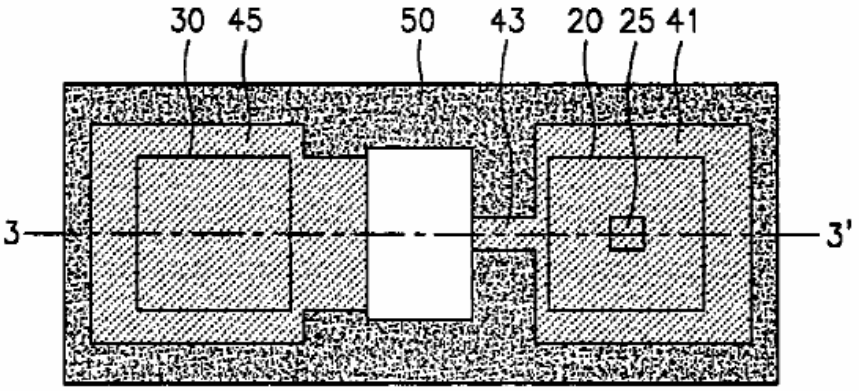

FIG. 3B

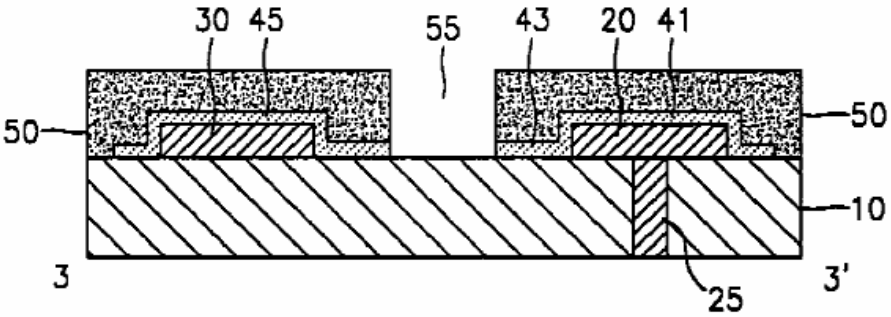

Figures 3A and 3B are plan and cross-sectional views showing another intermediate stage in the formation of an embodiment of Cho's

memory element (*id.*, col. 5, ll. 60-62). These views show the result of depositing an insulating layer 50 over electrode layer 40, followed by formation of a "second contact hole 55," which is

> formed to expose a portion of the first insulating layer 10 between the first electrode pad 20 and the second electrode pad 30 so as to separate the electrode layer 400 [*sic*, 40] in FIG. 2A into the first electrode 41 located on the first electrode pad 20 and the second electrode 45 located on the second electrode pad 30.

Id., col. 5, l. 67 to col. 6, l. 5.

Of electrodes 41 and 45, Cho describes only electrode 41 as involved in "heating." *See, e.g.*, Cho, col. 5, ll. 38-39 ("Particularly, the portion [of electrode layer 40] deposited on the first electrode pad 20 works as the heating layer."); col. 7, ll. 13-14 ("Because the first electrode 41 is actually used as a heating layer, the operation volume is substantially confined to the portion of the memory layer pattern 65 adjoining the side surface of the narrow width portion 43 of the first electrode 41."). *See also id.*, col. 7, ll. 55-56.

The rest of the fabrication process can take either of two paths to produce two different embodiments. One path is depicted by Figures 4, 5A, 5B, 6, 7A, and 7B, of which Figure 4, depicting one of the processing steps, is reproduced below.

FIG. 4

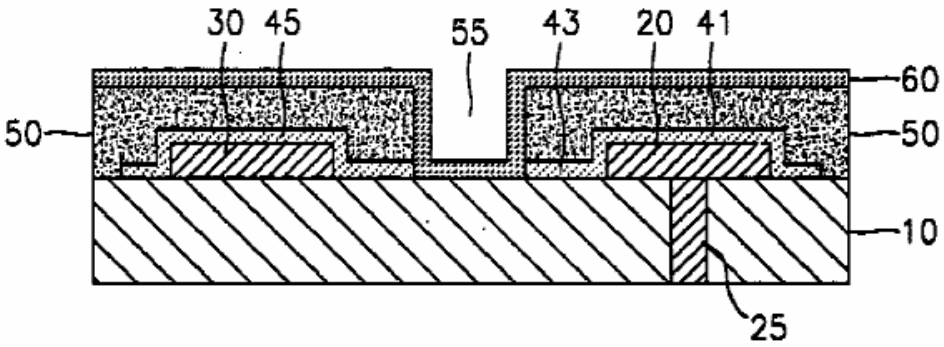

Figure 4 is a cross-sectional view showing a memory layer 60 formed in second contact hole 55 by depositing a phase change material so as to contact the facing ends of electrodes 41 and 45, which are exposed to the second contact hole 55 (*id.*, col. 6, ll. 24-28).

Further processing steps yield the memory structure depicted in Figures 7A and 7B, reproduced below.

FIG. 7A

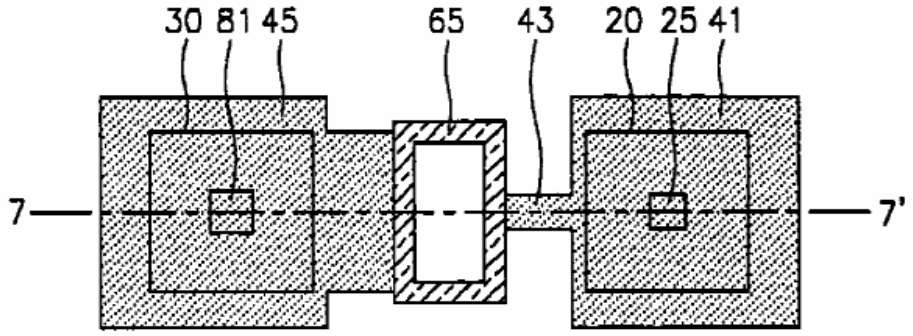

FIG. 7B

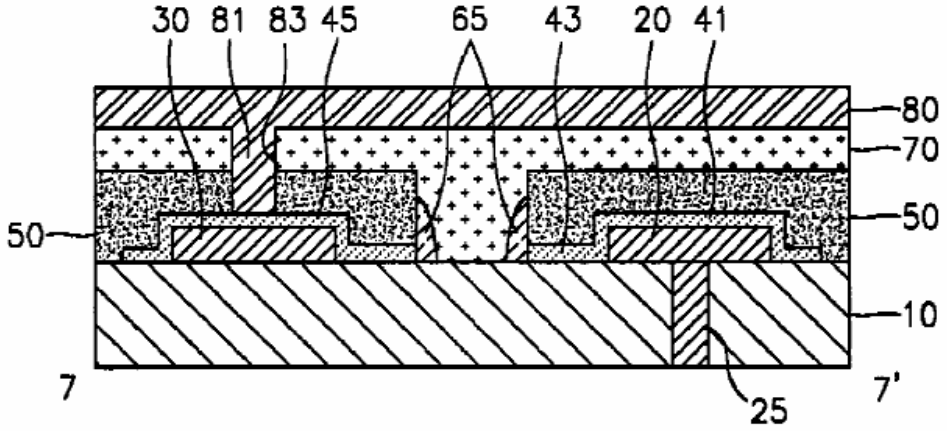

Figures 7A and 7B are plan and cross-sectional views showing the last step of adding an upper electrical line 80 connected to second electrode 45 (*id.*, col. 6, ll. 55-58). Numeral 65 designates the memory layer material pattern (*id.*, col. 6, l. 40).

Figures 8A and 8B, on which the Examiner relies and which show the second embodiment, are reproduced below.

FIG. 8A

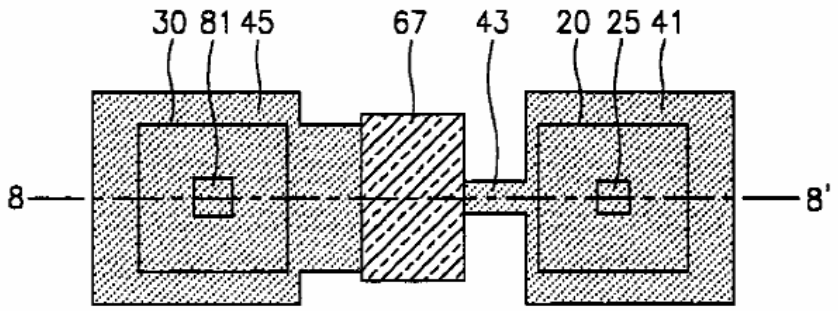

FIG. 8B

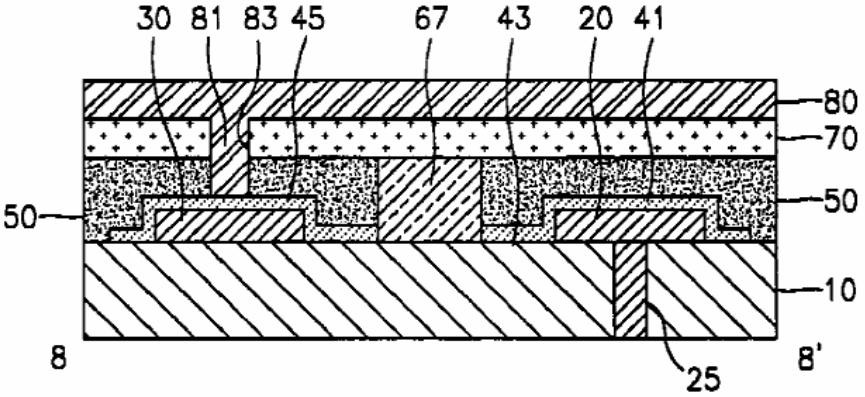

Figures 8A and 8B are plan and cross-sectional views showing a second embodiment, in which second contact hole 55 has been completely filled with phase change memory material 67 (*id.*, col. 7, ll. 33-41).

B. Analysis

The Examiner reads the claimed "heating electrode" having a hole extending therethrough collectively on electrodes 41 and 45 (Final Action 2-3). Appellants argue (Br. 4) that it is erroneous to read the claimed "heating electrode" on electrode 45 because, as noted above, Cho describes only electrode 41 as used for "heating." *See, e.g.*, Cho, col. 7, ll. 13-15. The Examiner responded that "since layer 40 is capable of being used as a heating layer, then electrodes 41 and 45 are also capable of being used as heating electrodes." Answer 9.

We agree with the Examiner that electrode 45 can be fairly characterized as "a heating layer." That term is not defined in Appellants' Specification (including the claims) and is therefore entitled to its broadest reasonable interpretation consistent with Appellants' disclosure. *Thrift*, 298 F.3d at 1364; *Morris*, 127 F.3d at 1054. Also, Appellants' Specification, in discussing the prior-art memory device depicted in Appellants' Figure 1, describes each of layers 3 and 7 as a heating layer (Specification 2:25 and 32) even though the only portion of phase change material layer 6 that has its phase controlled is a portion adjacent to layer 3. *See* i*d.*, 3:7-10 ("In a conventional phase change memory cell, the amount of the operation current for converting the phase change material layer 6 into an amorphous state or a
crystalline state depends on the area of the contact surface of the phase change material layer 6 and the first heating layer 3."). Thus, the term

"heating" appears to be applied to layers 3 and 7 in the prior-art memory device because both layers are involved in delivering heating current to the phase change material.

We recognize that Appellants' Specification in discussing Appellants' invention applies the term "heating electrode" to electrode 106, whose sidewall contacts the phase change material 116a (or 116a', 116a"), and not to electrode 118a, which also contacts the phase change material but is instead described as a conductive capping pattern (*id.*, 11:19). However, it is improper to read limitations into the claims from the disclosed examples. *Phillips*, 415 F.3d at 1323; *Priest*, 582 F.2d at 37.

Furthermore, because claim terms are to be given their broadest reasonable interpretations consistent with *Appellants'* disclosure, it is immaterial that Cho applies the term "heating" to electrode 41 and not to electrode 45.

C. Conclusion regarding Issue 1

For the foregoing reasons, Appellants have not shown that the Examiner erred in characterizing Cho's electrode 45 as a "heating electrode."

ISSUE 2: WHETHER ELECTRODES 41 AND 45 FORM A HEATING ELECTRODE HAVING A HOLE EXTENDING THERETHROUGH

A. Analysis

Appellants also argue that the Examiner erred in collectively characterizing electrodes 41 and 45 as constituting "a heating electrode . . . including an electrode hole extending through the heating electrode." Specifically, Appellants argue that "[i]n contrast with the electrode hole extending **through** the heating electrode, as recited in Claim 1, [Cho's] contact hole 55 is a gap or space that is positioned **between** spaced-apart first and second electrodes 41 and 45" (Br. 4) and that "a hole extending through an electrode is distinctive both structurally and functionally from a space between two electrodes." *Id*. The Examiner responded by finding, without identifying a particular dictionary as support, that "a hole is a gap, as can be seen from the definition of 'hole' in any number of dictionaries" (Answer 8) and also by finding that "[f]urthermore, electrodes 41 and 45 are formed from one material, layer 40, as seen in figure 2A, and contact hole 55 is formed through layer 40." *Id*., 8.

We agree with Appellants that the claim language "the heating electrode including an electrode hole extending through the heating electrode" requires a single electrode having a hole extending therethrough and thus cannot be read collectively on Cho's spaced apart electrodes 41 and 45. This conclusion is not altered by the fact that those two electrodes

are formed from a single electrode by the etching process used to form contact hole 55. The rectangular hole formed by that process exists only in insulating layer 50. The effect of that etching process on electrode 40 (Figs. 2A, 2B) is to convert electrode 40 into two separate electrodes by removing any electrode material falling within the rectangular window that corresponds to contact hole 55 in insulating layer 50, which is not the same as forming a hole or window in electrode 40.

B. Conclusion regarding Issue 2

For the foregoing reasons, we agree with Appellants that the Examiner erred in collectively characterizing electrodes 41 and 45 as a heating electrode having a hole extending therethrough. Consequently, we will not sustain the § 102(e) rejection of claims 1-3 and 6-11 for anticipation by Cho.

ISSUE 3: WHETHER WICKER'S ELECTRODES 130 AND 140 FORM A HEATING ELECTRODE HAVING A HOLE EXTENDING THERETHROUGH

A. The Wicker patent

The Examiner (Answer 6) relies on Wicker's Figure 14, which is reproduced below.

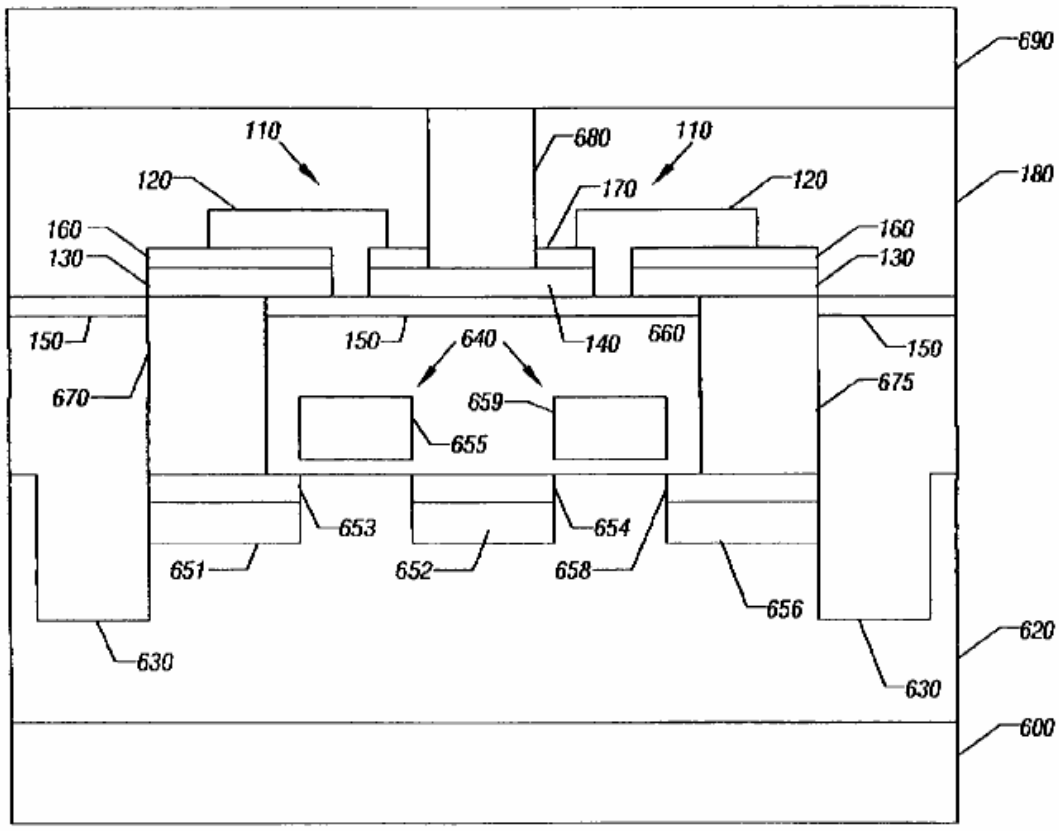

FIG. 14

Figure 14 is a cross-sectional view of an embodiment of Wicker's phase change memory (Wicker, col. 2, ll. 7-9).

The Examiner reads claim 1 on the features identified by numerals 120 to 170, which are easier to see in Figure 1, reproduced below.

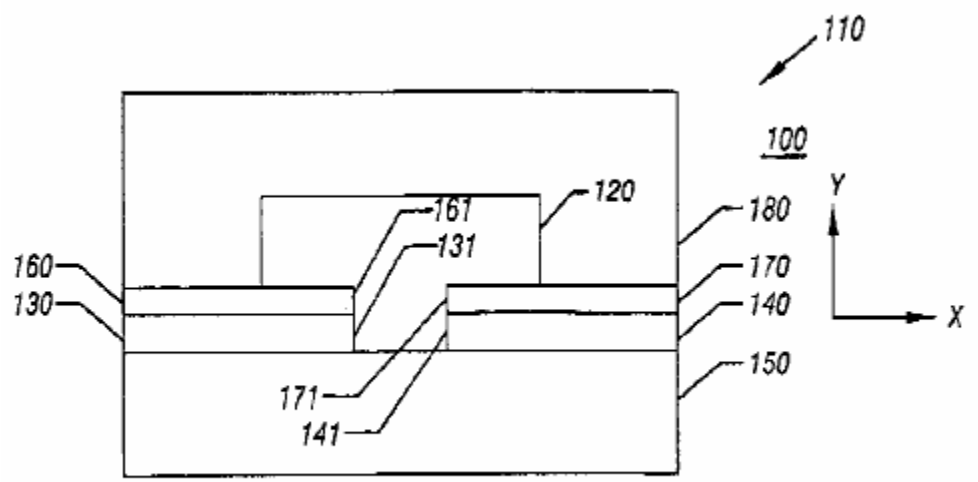

FIG. 1

Figure 1 is a cross-sectional view of an embodiment of Wicker's phase change memory 100 (*id.*, col. 1, ll. 42-44).

Wicker explains that "at least a portion of phase change material 120 is positioned between two electrodes 130 and 140" (*id.*, col. 2, ll. 49-51). Wicker describes both of these electrodes as contributing to heating. *See id.*, col. 8, ll. 35-39 ("[I]f electrodes 130 and 140 are symmetric in size, then these electrodes may contribute equally to the heating of phase change material 120 during programming, which may increase the efficiency and reliability of memory element 110.").

B. Analysis

The Examiner concedes that electrodes 130 and 140 are two electrodes separated by a gap (*id.*, 10) but found that claim 1 reads on Wicker in the same way that it reads on Cho. Appellants deny that those

electrodes can be collectively characterized as a heating electrode having a hole extending therethrough. Br. 6. For reasons like those given above in the discussion of Cho, we agree with Appellants' position.

C. Conclusion regarding Issue 3

We agree with Appellants that the Examiner erred in collectively characterizing Wicker's electrodes 130 and 140 as a heating electrode having a hole extending therethrough and are accordingly reversing the § 102(e) rejection of claims 1-3 and 6-11 for anticipation by Wicker.

DECISION

The rejection of claims 1-3 and 6-11 under 35 U.S.C. § 102(e) for anticipation by Cho is reversed, as is the rejection of claims 1-3 and 6-11 for anticipation by Wicker.

REVERSED

rwk

MYERS BIGEL SIBLEY & SAJOVEC
PO BOX 37428
RALEIGH, NC 27627