UNITED STATES PATENT AND TRADEMARK OFFICE

BEFORE THE BOARD OF PATENT APPEALS
AND INTERFERENCES

Ex parte PERSONALIZED MEDIA COMMUNICATIONS, LLC

Appeal 2008-4864
Reexamination Control 90/006,838
U.S. Patent 5,109,414
Technology Center 3900

Decided: January 07, 2009

Before LEE E. BARRETT, SCOTT R. BOALICK, and
KEVIN F. TURNER, *Administrative Patent Judges.*

BOALICK, *Administrative Patent Judge*.

DECISION ON APPEAL

Personalized Media Communications, LLC appeals under 35 U.S.C. § 134(b) and 35 U.S.C. § 306 from a final rejection of claims 1, 2, 5-12, 23, and 26.[1] We have jurisdiction under 35 U.S.C. § 6(b).

An oral hearing was held on November 19, 2008. The record includes a written transcript of the oral hearing.

We reverse.

STATEMENT OF THE CASE

Reexamination proceeding

A request for reexamination of U.S. Patent 5,109,414 (the '414 patent), entitled "Signal Processing Apparatus and Methods," was filed on October 31, 2003 by third party requester Scientific-Atlanta, Inc. (Requester). The '414 patent issued April 28, 1992, to John C. Harvey and James W. Cuddihy, based on Application 07/588,126 (the '126 application), filed September 25, 1990. The real party in interest is the patent owner, Personalized Media Communications, LLC. The '414 patent is said to be a continuation of Application 07/096,096, filed September 11, 1987, now U.S. Patent 4,965,825 (hereinafter referred to as the 1987 application or '825 patent), which is said to be a continuation in part (CIP) of Application 06/829,531, filed February 14, 1986, now U.S. Patent 4,704,725 (the '725 patent), which is said to be a continuation of Application 06/317,510, filed

[1] Claims 3, 4, 13-22, 24, and 25 have been confirmed as patentable.

November 3, 1981, now U.S. Patent 4,694,490 (hereinafter referred to as the 1981 application or '490 patent).

Related proceedings

The Brief indicates that the '414 patent is part of a chain of patents that includes additional later issued patents and various pending patent applications. (App. Br. 3.) The Brief identifies seven related patents that are each involved in reexamination proceedings. (*Id.*)

The Brief identifies a number of related U.S. Patent and Trademark Office (USPTO), International Trade Commission, and court proceedings. (App. Br. 3-6.) The Brief indicates (App. Br. 5) that the '414 patent is asserted in *Pegasus Development Corp. and Personalized Media Comm., LLC v. DIRECTV Inc.*, No. CA 00-1020 (D. Del. filed Dec. 4, 2000), which has been stayed, and is also asserted in *Personalized Media Communications, LLC v. Scientific-Atlanta, Inc. et al.*, No. 1:02-CV-824 (CAP) (N.D. Ga. filed Mar. 28, 2002), which also has been stayed.

Appellant's invention

The claimed invention relates to signal processing apparatus and methods to automate operations at an intermediate transmission station such as a cable "head end." ('414 patent, abstract, col. 182, ll. 7-10 and 37-44, col. 198, ll. 33-44, Figures 6A, 6B; *see also* Transcript of Oral Hearing at 2:2-7.)

Figures 6A and 6B of the '414 patent are reproduced below:

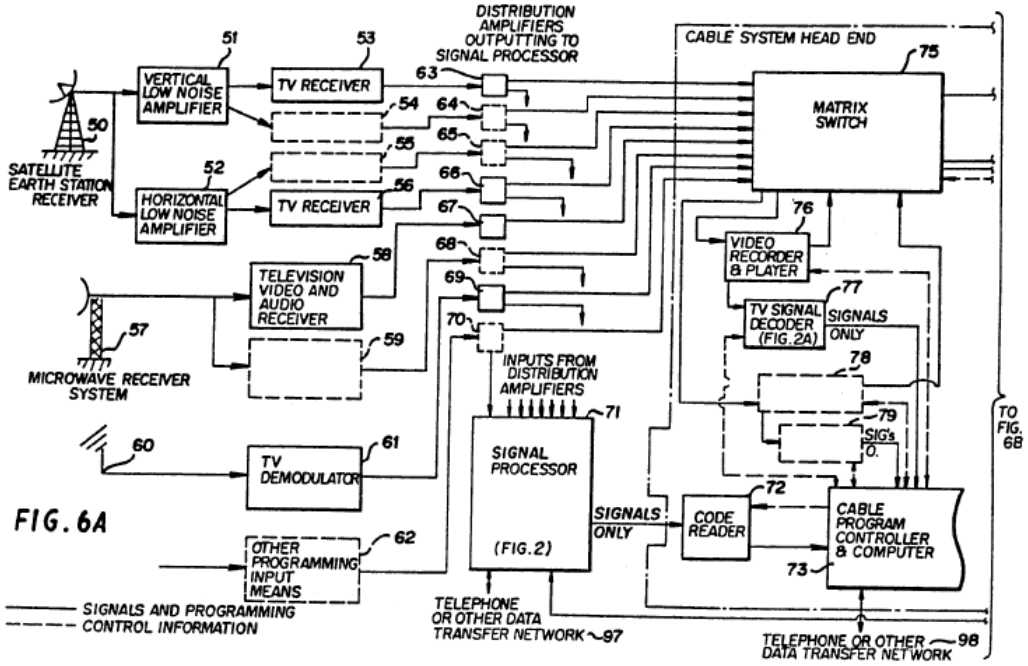

FIG. 6A

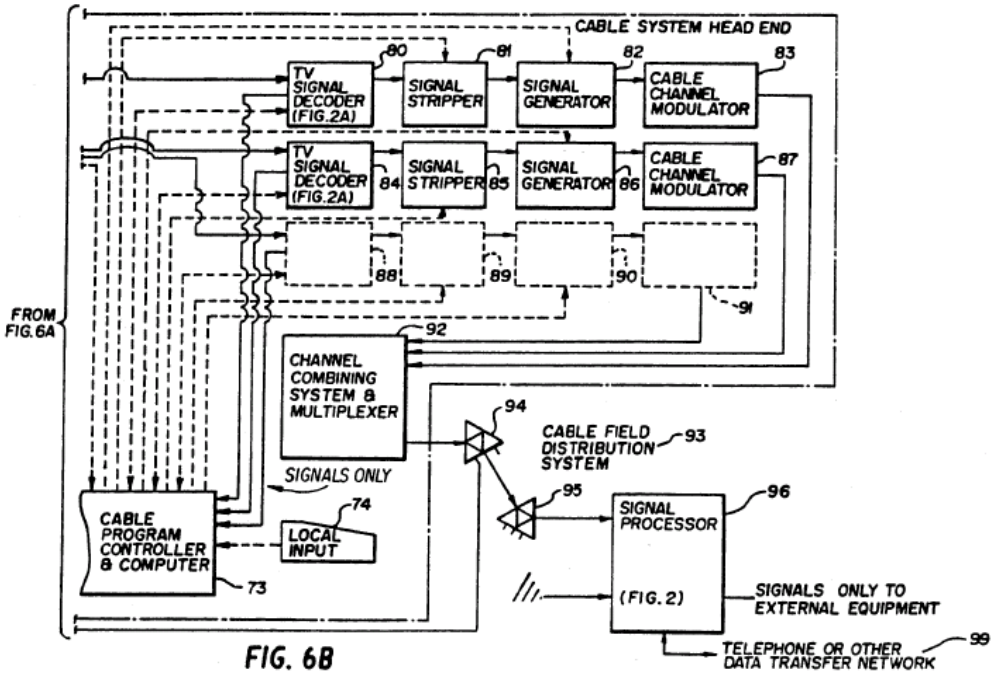

FIG. 6B

Figures 6A and 6B "are a block diagram of one example of signal processing apparatus and methods at an intermediate transmission station, in this case a cable system headend." ('414 patent, col. 12, ll. 12-15.)

The Specification teaches that various disclosed embodiments of signal processing apparatus "can be used to automate the operations of intermediate transmission stations that receive and retransmit programming." ('414 patent, col. 181, ll. 64-68.) "The stations so automated may transmit any form of electronically transmitted programming, including television, radio, print, data, and combined medium programming and may range in scale of operation from wireless broadcast stations that transmit a single programming transmission to cable systems that cablecast many channels simultaneously." ('414 patent, col. 181, l. 68 to col. 182, l. 6.)

In particular, "FIG. 6 illustrates Signal Processing Apparatus and Methods at an intermediate transmission station that is a cable television system 'head end' and that cablecasts several channels of television programming." ('414 patent, col. 182, ll. 7-10.) "The station receives programming from many sources," ('414 patent, col. 182, ll. 12-13) such as: (1) transmissions from a satellite received by satellite antenna 50, low noise amplifiers 51 and 52, and TV receivers 53, 54, 55, and 56; (2) microwave transmissions received by microwave antenna 57 and television video and audio receivers 58 and 59; (3) conventional TV broadcast transmissions received by antenna 60 and TV demodulator 61; and (4) other electronic programming transmissions received by other programming input means 62. ('414 patent, col. 182, ll. 14-21.) After receiving the transmissions,

> [e]ach receiver/modulator/input apparatus, 53 through 62, transfers its received transmissions into the station by hard-wire to a conventional matrix switch, 75, well known in the art, that outputs to one or more recorder/players, 76 and 78, and/or to apparatus that outputs said transmissions over various channels to the cable system's field distribution system, 93, which

> apparatus includes cable channel modulators, 83, 87, and 91, and channel combining and multiplexing system, 92. Programming can also be manually delivered to said station on prerecorded videotapes and videodiscs. When played on video recorders, 76 and 78, or other similar equipment well known in the art, such prerecorded programming can be transmitted via switch 75 to field distribution system, 93.

('414 patent, col. 182, ll. 22-36.)

According to the Specification, "[i]n the prior art, the identification of incoming programming, however received; the operation of video player and recorder equipment, 76 and 78; and the maintenance of records of programming transmissions are all largely manual operations." ('414 patent, col. 182, ll. 37-41.) "FIG. 6 shows the introduction of signal processing apparatus and methods to automate these and other operations." ('414 patent, col. 182, ll. 42-44.)

A dedicated distribution amplifier 63, 64, 65, 66, 67, 68, 69, or 70 is "[i]n line between each of the aforementioned receiver/demodulator/input apparatus, 53, 54, 55, 56, 57, 58, 59, 60, 61, or 62, and matrix switch, 75." ('414 patent, col. 182, ll. 45-49.) The distribution amplifier splits each incoming feed into two paths. (*Id.*) "One path is the conventional path whereby programming flows from each given receiver/demodulator/input apparatus, 53, 54, 55, 56, 57, 58, 59, 60, 61, or 62, to matrix switch, 75." ('414 patent, col. 182, ll. 49-53.) "The other path inputs the transmission of said given receiver/demodulator/input apparatus, 53, 54, 55, 56, 57, 58, 59, 60, 61, or 62 individually to signal processor system, 71." ('414 patent, col. 182, ll. 53-56.) "In other words, distribution amplifier, 63, continuously inputs the programming transmission of receiver, 53, to matrix switch, 75,

and separately to signal processor system, 71; distribution amplifier, 64, inputs the programming transmission of receiver, 54, to matrix switch, 75, and separately to signal processor system, 71; etc." ('414 patent, col. 182, ll. 56-62.)

> At signal processor system, 71 . . . the outputted transmission of each distribution amplifier, 63, 64, 65, 66, 67, 68, 69, or 70, is inputted into a dedicated decoder . . . that processes continuously the inputted transmission of said distribution amplifier, 63, 64, 65, 66, 67, 68, 69, or 70; selects SPAM [Signal Processing Apparatus and Methods] messages in said transmission that are addresses to ITS [Intermediate Transmission Station] apparatus of said intermediate transmission station; automatically adds, in a predetermined fashion, source mark information that identifies said associated distribution amplifier, 63, 64, 65, 66, 67, 68, 69, or 70; and transfers said selected messages, with said source mark information, to code reader, 72. Signal processor system, 71, also has signal processor means to control signal processor system, 71, to record meter-monitor information of said message information, and to transfer recorded information to external communications network, 97.

('414 patent, col. 182, l. 63 to col. 183, l. 12.)

The code reader 72 "buffers and passes the received SPAM message information, with source mark information, to cable program controller and computer, 73." ('414 patent, col. 183, ll. 13-15.) The cable program controller and computer 73 is described as "the central automatic control unit for the transmission station[]" ('414 patent, col. 183, ll. 16-18) and performs various monitoring and control functions (*see*, *e.g.*, '414 patent, col. 183, l. 22 to col. 187, l. 48).

The claims

Claims 1, 6, 23, and 26 are exemplary and reproduced below (with minor formatting added):

1. In a signal processing system,

a plurality of receiver/distribution means for receiving programming from a program source and for inputting said programming to a switch means and a plurality of detector means,

a switch means for receiving output from said plurality of receiver/distribution means, said switch means being capable of directing a selected portion of said programming received from one or more said receiver/distribution means to an associated output device,

a plurality of detector means for detecting control signals respecting said programming,

a first processor means operatively connected to said plurality of detector means for identifying each detected control signal as having been detected by a particular detector means,

a storage means for receiving and storing said detected control signals, and

a second processor means for controlling the output directing function of said switch means.

6. In a signal processing system,

a receiver/distribution means for receiving programming from a plurality of program sources and for outputting said programming to a matrix switch means and a control signal detector means,

a matrix switch means for receiving said programming from said receiver/distributor means and for outputting selected portions of said received programming to a broadcast transmission means and/or a recording device operatively connected to said broadcast transmission means,

a control signal detector means for detecting control signals respecting said programming and transferring said control signals to a storage/transfer means, said control signal detector means being configured to detected [sic] said control signals in a predetermined frequency range or at a predetermined location within said programming,

a storage/transfer means for receiving and storing said control signals and for transferring at least a portion of said control signals for further processing, and

a processor means for controlling the output functions of said matrix switch means and the transfer functions of said storage/transfer means.

23. A method of inputting data in a system that consists of a first input means, at least one intermediate input means, and a plurality of processors consisting of the steps of:

transmitting a plurality of data units,

causing memory means associated with a selected intermediate input means to record a selected data unit, and

causing said memory means to transmit selected information of said selected data unit at a selected time,

thereby to cause said intermediate input means to input data of said selected data unit to at least one selected processor at said selected time and cause said processor to process said input data.

26. A method of communicating television programming in a system that consists of a transmission station and a plurality of receiving stations, each receiving station having at least one detector, one video recorder and one video player with at least one said detectors pre-programmed to detect program identification information, consisting of the steps of:

transmitting a plurality of units of television pre-programming containing embedded program identification information,

causing a selected receiving station to record a selected television program unit,

causing said station to position the start of said program unit at the play head of a video player,

causing said player thereafter to play and transmit at a selected time

thereby to cause said selected station to transmit said selected unit at said selected time.

The references

The prior art relied upon by the Examiner in rejecting the claims on appeal is:

Summers	US 3,848,082	Nov. 12, 1974
Haselwood	US 4,025,851	May 24, 1977
Watson	US 4,625,235	Nov. 25, 1986 (filed May 19, 1983)

Harry A. Etkin, *Vertical Interval Signal Applications*, Broadcast Engineering, pp. 30-35, April 1970 ("Etkin").

P. R. Hutt, *A System of Data Transmission in the Field Blanking Period of the Television Signal*, SLICE, June 1973 ("Hutt").

W. Niessner, *Remote control of the Austrian television network using insertion data signals*, E.B.U. Technical Review, No. 179, February 1980 ("Niessner").

The rejections

The Examiner rejected claims 1, 2, 5-12, 23, and 26[2] as being unpatentable over the prior art.

Anticipation

Claim 1 stands rejected under 35 U.S.C. § 102(b) as being anticipated by Niessner. (Ans. 11.)

Claim 2 stands rejected under 35 U.S.C. § 102(b) as being anticipated by Niessner. (Ans. 16.)

---

[2] Claims 1, 2, 5-12, 23, and 26 have not been amended during the instant reexamination proceeding.

Claim 6 stands rejected under 35 U.S.C. § 102(b) as being anticipated by Niessner. (Ans. 18.)

Claim 7 stands rejected under 35 U.S.C. § 102(b) as being anticipated by Niessner. (Ans. 23.)

Claim 8 stands rejected under 35 U.S.C. § 102(b) as being anticipated by Niessner. (Ans. 24.)

Claim 10 stands rejected under 35 U.S.C. § 102(b) as being anticipated by Niessner. (Ans. 25.)

Claim 12 stands rejected under 35 U.S.C. § 102(b) as being anticipated by Niessner. (Ans. 26.)

Claim 23 stands rejected under 35 U.S.C. § 102(b) as being anticipated by Summers. (Ans. 27.)

Claim 26 stands rejected under 35 U.S.C. § 102(b) as being anticipated by Haselwood. (Ans. 29.)

Claim 7 stands rejected under 35 U.S.C. § 102(b) as being anticipated by Watson.[3] (Ans. 31.)

---

[3] Although the Examiner's rejection initially states that claim 7 is rejected under § 102(b), it goes on to explain that Watson qualifies as prior art under § 102(e). (Ans. 31.) According to the Examiner's rejection, the earliest priority date available to claim 7 is September 11, 1987. (Ans. 31.) Watson was patented November 25, 1986. We note that under the Examiner's rationale Watson also would qualify as prior art under § 102(a). The precise ground of rejection is not important because, as discussed *infra*, we disagree with the Examiner's finding (Ans. 7-9, 31, 39-48) that claim 7 is not entitled to claim priority from the 1981 application. Thus, we conclude that Watson is not prior art as to claim 7.

Obviousness

Claims 5, 9, and 11 stand rejected under 35 U.S.C. § 103(a) as being obvious over Niessner, Hutt, and Etkin. (Ans. 33.)

FINDINGS OF FACT

The record supports the following findings of fact (FF) by a preponderance of the evidence.

Niessner

1. Niessner describes the use of insertion data signals (IDS) over existing video links between switching and control points to remotely control switching operations for the Austrian television network. (Abstract; p. 25, last paragraph of left hand column.) In particular, insertion data signals are used "to remotely control the switching operations." (P. 25, last line of left hand column.)

2. Figure 3 of Niessner is reproduced below:

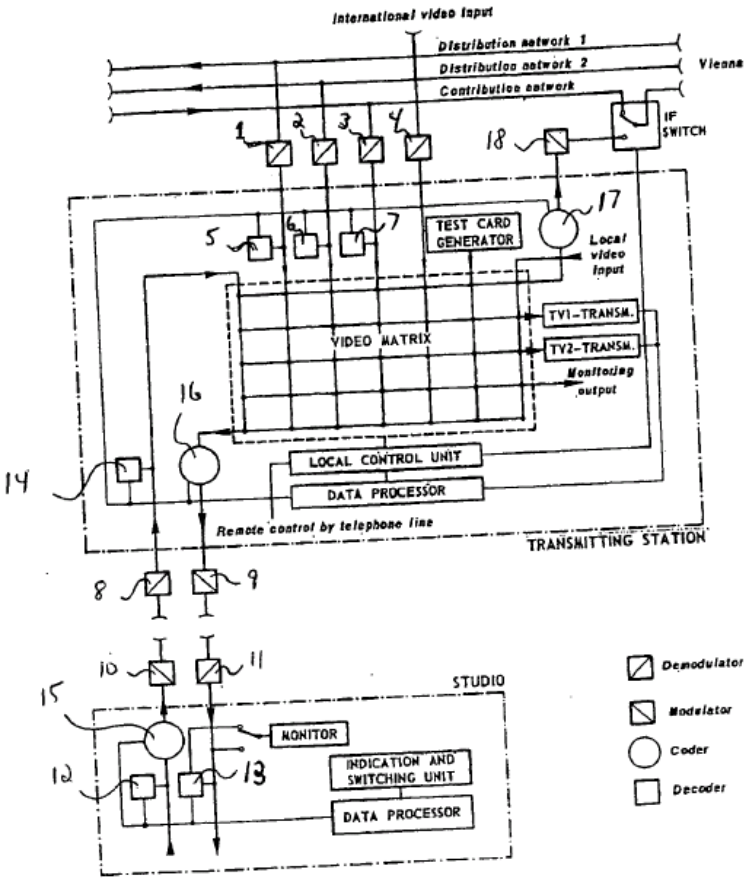

Fig. 3. — Block diagram of the possible circuit switching at one of the main transmitting stations.

Figure 3 shows a video switching point at a main transmitting station. (P. 25, first paragraph of right hand column.)

3. Niessner teaches that "[a]ll the inputs to the video switching matrices which carry information are fitted with IDS decoders [5, 6, 7] and all information-conveying outputs are fitted with coders [16, 17]." (P. 26, first paragraph of right hand column.) Micro-computer systems were developed "[f]or the processing of the incoming

information" (p. 27, first paragraph of left hand column) and "[t]hey receive signals from the IDS decoders or control panels and pass control signals to the video switching matrix and display panels : they also send information to the IDS coders[]" (*id*.). A data bus is used to exchange information between the processing system and the IDS coders and decoders. (P. 27, second paragraph of left hand column.)

4. Niessner teaches that "[i]f the power supply voltage falls below a safety level, the implementation of instructions is inhibited before incorrect operations can occur." (P. 27, last paragraph of left hand column to first paragraph of right hand column.) "When the supply returns to normal, all the instructions . . . are reintroduced and must be repeated in successive cycles, before being implemented." (P. 27, first paragraph of right hand column.) "These arrangements are needed to ensure that the response to an instruction is sufficiently rapid (less than 0.1 s) and to re-establish the correct switching pattern after a mains supply failure." (P. 27, second paragraph of right hand column.) "Until such time as they are cancelled, all the instructions are stored after decoding to protect them against a failure of the mains supply." (P. 27, third paragraph of right hand column.) "This avoids random operations during the switching of a circuit." (*Id.*) The memory is located outside the data processing system, and the data processing system "may be removed from service for maintenance without altering the matrix switching." (*Id.*) "If the data transmission is interrupted or the coding or data processing system fails, the video

switching matrix may be operated manually by means of the existing remote-control and monitoring system for the transmitters." (*Id.*)

Summers

5. Summers describes transmitting and utilizing supplemental data via television signals. (Abstract.)

6. Figure 2 of Summers is reproduced below:

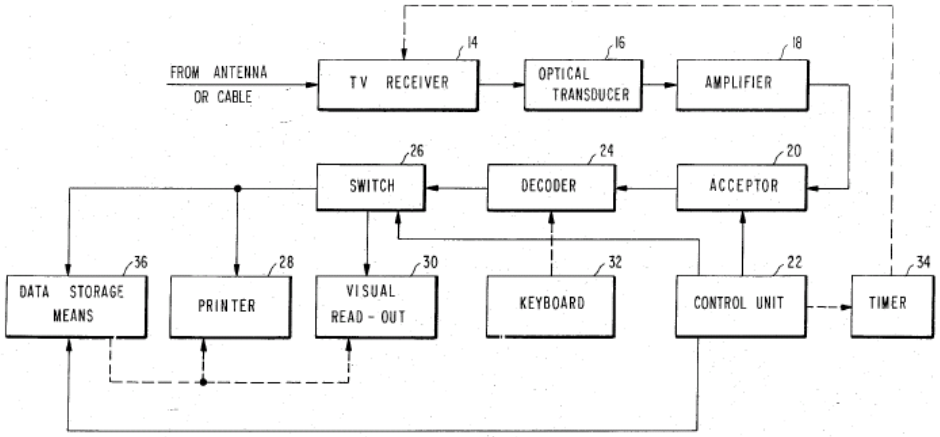

FIG. 2

Figure 2 "is a schematic view of the receiving portion of a supplemental data system." (Col. 2, ll. 32-34.)

7. Supplemental data is entered into the system, mixed with a video signal, transmitted by a television transmitter, and received by a television receiver 14. (Col. 1, ll. 45-59; col. 4, ll. 3-6.) Summers teaches that

> [t]he supplemental data signal transmitted and received through the use of the system of the present invention could also be utilized to program a data storage means 36 (FIG. 2) such as a computer at the receiving end for various purposes. In this manner, the supplemental data can be stored and used subsequently if and when desired. Thus, it is not necessary that the data transmitted and received by the present system be viewed or otherwise utilized in real time. As an illustrative example, subsequent use of the data could be at a preselected time, upon sensing of an event or completion of a prior program, or upon user command.

(Col. 7, ll. 56-67.)

Haselwood

8. Haselwood describes a system for automatically monitoring programs that are broadcast by commercial television stations. (Col. 1, ll. 7-10.)

9. Figure 2 of Haselwood is reproduced below:

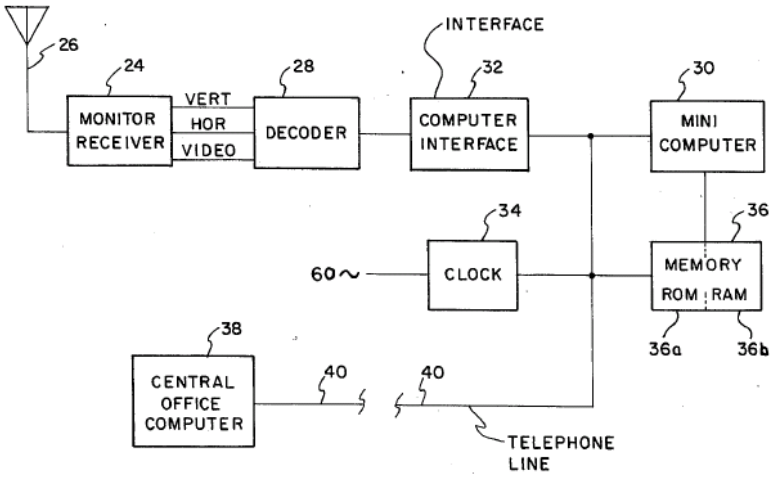

FIG. 2

Figure 2 is a block diagram of one embodiment of a monitoring system. (Col. 3, ll. 1-3.)

10. Haselwood teaches that "[t]he decoder 28 processes the video signal . . . and recovers the information encoded . . . and applies the information thus recovered to a mini-computer 30 via a suitable computer interface 32." (Col. 3, ll. 59-64.)

11. Figure 3 of Haselwood is reproduced below:

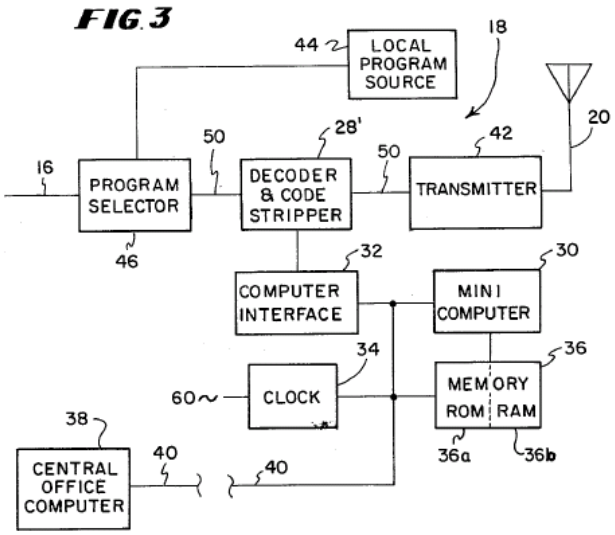

Figure 3 is a block diagram of another embodiment of a monitoring system. (Col. 3, ll. 4-5.)

12. Television network outlet 18 receives video information combined with coding information from a network feed line 16. (Col. 3, ll. 23-28.) "A program selector 46 is used selectively to connect the

network feed line 16 or the program source 44 to the transmitter 42 so that either a network or a local program may be broadcast." (Col. 4, ll. 29-32.) "The local program source 44 may be one of various program sources including a television camera for broadcasting live programs, a flying spot scanner for showing movies, or a video tape recorder for playing back video taped programs including network programs that had been previously taped for delayed broadcast." (Col. 4, ll. 32-38.) "The output of the program selector 46 feeds a transmitter feed line 50 which applies the selected video program to the transmitter 42." (Col. 4, ll. 38-41.)

13. Haselwood teaches that a decoder and stripper 28' retrieves the code encoded on the signal received by the network outlet 18 and "applies it to the computer interface 32 for application to the mini-computer 30." (Col. 4, ll. 45-48.)

Hutt

14. Hutt describes a system for transmitting data in the vertical interval of a television signal. (Abstract.)

Etkin

15. Etkin describes "[v]ertical interval signal transmission methods and applications." (P. 30, second paragraph of leftmost column.)

PRINCIPLES OF LAW

"It is elementary patent law that a patent application is entitled to the benefit of the filing date of an earlier filed application only if the disclosure of the earlier application provides support for the claims of the later application, as required by [the first paragraph of] 35 U.S.C. § 112." *PowerOasis, Inc. v. T-Mobile USA, Inc.*, 522 F.3d 1299, 1306 (Fed. Cir. 2008) (quoting *In re Chu*, 66 F.3d 292, 297 (Fed. Cir. 1995)). Different claims of a continuation-in-part (CIP) application may receive different effective filing dates because subject matter arising "for the first time in the CIP application does not receive the benefit of the filing date of the parent application." *Augustine Medical, Inc. v. Gaymar Indus., Inc.*, 181 F.3d 1291, 1302 (Fed. Cir. 1999). Under 35 U.S.C. § 120, "in a chain of continuing applications, a claim in a later application receives the benefit of the filing date of an earlier application so long as the disclosure in the earlier application meets the requirements of 35 U.S.C. § 112, ¶ 1, including the written description requirement, with respect to that claim." *Technology Licensing Corp. v. Videotek, Inc.*, No. 2007-1441, -1463, 2008 WL 4529095, at *7 (Fed. Cir. Oct. 10, 2008) (citing *Transco Prods. Inc. v. Performance Contracting, Inc.*, 38 F.3d 551, 556 (Fed. Cir. 1994)).

Under the written description requirement of 35 U.S.C. § 112, first paragraph, the disclosure of the prior application relied upon must reasonably convey to one of ordinary skill in the art that, as of the filing date of the prior application, the inventor had possession of the later claimed subject matter. *Vas-Cath Inc. v. Mahurkar*, 935 F.2d 1555, 1563 (Fed. Cir. 1991). The specification need not describe the claimed subject matter in

exactly the same terms as used in the claims, but it must contain an equivalent description of the claimed subject matter. *Lockwood v. American Airlines, Inc.*, 107 F.3d 1565, 1572 (Fed. Cir. 1997).

Anticipation is established when a single prior art reference discloses expressly or under the principles of inherency each and every limitation of the claimed invention. *Atlas Powder Co. v. IRECO Inc.*, 190 F.3d 1342, 1347 (Fed. Cir. 1999); *In re Paulsen*, 30 F.3d 1475, 1478-79 (Fed. Cir. 1994). Under the principles of inherency, a reference anticipates if it necessarily includes or functions in accordance with the claimed limitations. *Atlas Powder*, 190 F.3d at 1347. Inherency may be established by extrinsic evidence, but "[s]uch evidence must make clear that the missing descriptive matter is necessarily present in the thing described in the reference, and that it would be so recognized by persons of ordinary skill." *Continental Can Co. v. Monsanto Co.*, 948 F.2d 1264, 1268 (Fed. Cir. 1991). Inherency may not be established by probabilities or possibilities, and "[t]he mere fact that a certain thing *may* result from a given set of circumstances is not sufficient." *Id.*

"Section 103 forbids issuance of a patent when 'the differences between the subject matter sought to be patented and the prior art are such that the subject matter as a whole would have been obvious at the time the invention was made to a person having ordinary skill in the art to which said subject matter pertains.'" *KSR Int'l Co. v. Teleflex Inc.*, 127 S. Ct. 1727, 1734 (2007). In *KSR*, the Supreme Court reaffirmed that "[t]he combination of familiar elements according to known methods is likely to be obvious when it does no more than yield predictable results." *Id.* at 1739.

"[R]ejections on obviousness grounds cannot be sustained by mere conclusory statements; instead, there must be some articulated reasoning with some rational underpinning to support the legal conclusion of obviousness." *In re Kahn*, 441 F.3d at 988. "To facilitate review, this analysis should be made explicit." *KSR*, 127 S. Ct. at 1741. However, "the analysis need not seek out precise teachings directed to the specific subject matter of the challenged claim, for a court can take account of the inferences and creative steps that a person of ordinary skill in the art would employ." *Id.*

During examination of a patent application, a claim is given its broadest reasonable construction consistent with the specification. *In re Prater*, 415 F.2d 1393, 1404-05 (CCPA 1969). "[T]he words of a claim 'are generally given their ordinary and customary meaning.'" *Phillips v. AWH Corp.*, 415 F.3d 1303, 1312 (Fed. Cir. 2005) (en banc) (internal citations omitted). The "ordinary and customary meaning of a claim term is the meaning that the term would have to a person of ordinary skill in the art in question at the time of the invention, i.e., as of the effective filing date of the patent application." *Id.* at 1313.

ANALYSIS

Overview

Appellant contends that the Examiner erred in rejecting claims 1, 2, 5-12, 23, and 26. Reviewing the record before us and the findings of facts cited above, we agree. In particular, Appellant has shown that the Examiner erred in finding that claim 7 not entitled to the benefit of the filing date of

the 1981 application. Appellant also has shown that the Examiner failed to make a prima facie showing of anticipation with respect to claims 1, 2, 6-8, 10, 12, 23, and 26 and has shown that the Examiner failed to make a prima facie showing of obviousness with respect to claims 5, 9, and 11.

Effective Filing Date Issue

The Examiner found that claim 7 of the '414 patent is not entitled to the effective filing date of the 1981 application. (Ans. 7-9, 38-48.) The Examiner's position is "that the issue of Section 120 priority, given the current fact pattern, boils down to the question of whether (or not) there is 'continuity of disclosure' between the instant 557 page 1987 CIP specification and the original 44 page 1981 parent specification, to which priority is alleged, ***with respect to 'the invention' being claimed***." (Ans. 7.) The Examiner characterizes "the present fact pattern" as "one in which the instant 557 page 1987 CIP specification failed to incorporate the original 44 page 1981 parent specification in any immediately discernible fashion." (*Id*.)

According to the Examiner, to determine whether "continuity of disclosure" exists, claim 7 of the '414 patent, "which recites 'programming' must be read and construed in accordance with the definition that is explicitly set forth in the instant 1987 CIP specification, i.e., using the 'broadest reasonable interpretation' standard, to determine 'the invention'/"subject matter' that is being claimed." (Ans. 8.) After that, according to the Examiner, "one looks to the original 1981 disclosure to see if this claimed 'the invention'/'subject matter' was described, in accordance

with the requirements of Section 112-1, in the original 1981 specification." (*Id*.)

The Examiner found that the recited claim term "programming" was defined differently (i.e., more broadly) in the 1987 (CIP) application ('825 patent) than in the 1981 application ('490 patent). (*Id*.) Thus, the Examiner found that, "[g]iven the expanded defining [sic] of 'programming' that is necessarily being claimed [by claim 7], being that the 1987 CIP disclosure is the . . . disclosure that defines the scope/meaning of the claim, . . . continuity of disclosure does not exist between the respective 1981 and 1987 CIP disclosures with ***respect to 'the invention' being claimed***." (*Id*.)

Appellant argues that the Examiner erred in finding that claim 7 of the '414 patent is not entitled to the benefit of the 1981 application filing date. (App. Br. 32-36; Reply Br. 6-10.) Appellant argues that the declaration of Dr. Alan C. Bovik establishes 35 U.S.C. § 112 first paragraph written description support for claim 7 in the present '414 patent and the 1981 specification ('490 patent). (App. Br. 33, 35-36; Reply Br. 7-10.) Appellant further contends that "[t]he Examiner has failed to point to any errors or inadequacies in the Bovik Declaration." (Reply Br. 7.)

Appellant argues that "a proper determination of whether a claim is entitled to priority under § 120 requires an analysis of whether the claimed invention is sufficiently described and enabled by the parent specification" (App. Br. 33). Appellant further contends that "[t]he Examiner has not analyzed claim 7 to determine that it is not disclosed by the parent application in the manner provided by the first paragraph of 35 U.S.C. § 112." (Reply Br. 6.) And even if the "continuity of disclosure test"

applied by the Examiner is correct, Appellant argues that claim 7 satisfies this test. (Reply Br. 7-10.) In addition, "Appellant notes that the Examiner has failed to identify a single limitation that when construed according to the instant CIP specification is not disclosed in the 1981 parent specification." (Reply Br. 7.)

Based on Appellant's contentions, the issue presented is:
Has Appellant shown that the Examiner erred in finding that claim 7 is not entitled, under 35 U.S.C. § 120, to the effective filing date of the 1981 application?

We agree with Appellant that the Examiner has failed to show how the subject matter of claim 7 lacks written description in the 1981 application. A rejection for lack of written description is established by identifying a specific claim limitation and explaining why the limitation is not described in the patent which is relied upon for § 120 priority. In this case, where Appellant has provided a declaration to show support in the 1981 application ('490 patent) and the '414 patent, it is incumbent on the Examiner to address why the declaration is in error. General discussions about differences in the scope of disclosure are not enough to establish lack of support.

The Examiner's reasoning that the 1987 CIP application is of different scope than the parent 1981 application fails to establish lack of written description support. A CIP application, by definition, contains new subject matter not found in the parent, so the "scope" of disclosure will, of course, be different. The Examiner fails to explain why claim 7 of the '414 patent is not supported by the 1981 application or why, if the claim is supported by

the more basic 1981 application, the basic subject matter is not common to the 1987 application.

The fact that the 1981 application is not incorporated by reference and is not physically incorporated into the 1987 application in "any immediately discernable fashion" does not prove a lack of written description support. "An invention may be described in many different ways and still be the same invention." *Kennecott Corp. v. Kyocera Int'l Inc.*, 835 F.2d 1419, 1422 (Fed. Cir. 1987). "[T]he invention claimed [in the later application] does not have to be described [in the parent] in ipsis verbis in order to satisfy the description requirement of § 112." *In re Lukach*, 442 F.2d 967, 969 (CCPA 1971).

Appellant has provided the Bovik Declaration to describe the written description support in the 1981 application ('490 patent) and in the 1987 application ('825 patent). Thus, Appellant has specifically pointed out what portion of the patents it relies upon for support. The burden of going forward with the evidence now shifts to the Examiner to prove why the declaration does not show written description support for the claims. This must be done with particularity. However, the Examiner does not point to a single claim limitation that is not discussed in the Bovik Declaration and that is thought to be unsupported.

Accordingly, Appellant has shown that the Examiner erred in finding that claim 7 is not entitled to claim the benefit of the 1981 application filing date.

§ 102(b) Rejections - Niessner

Claims 1 and 2.

With respect to claim 1, Appellant argues that Niessner does not teach a first processor means for identifying each detected control signal *as having been detected by a particular detector means*. (App. Br. 40; Reply Br. 11-12.) Appellant contends that the Examiner's rejection "reads the term 'particular' out of the claimed first processor means." (App. Br. 40.) Appellant further argues that Niessner does not teach a plurality of detector means for detecting control signals *respecting said programming*. (App. Br. 40-41.) Appellant argues that the Examiner erred in rejecting claim 2 for the same reasons given with respect to claim 1. (App. Br. 41-42.) Regarding claim 2, Appellant also argues that Niessner does not teach "a buffer/memory storage means for receiving and storing said detected control signals." (App. Br. 41.)

Appellant's arguments present the following issue:
Has Appellant shown that the Examiner erred in rejecting claims 1 and 2 under 35 U.S.C. § 102(b) as being anticipated by Niessner?

The resolution of this issue turns on the following subsidiary issues:

1. Has Appellant shown that the Examiner erred in finding that Niessner teaches a first processor means for identifying each detected control signal as having been detected by a particular detector?

2. Has Appellant shown that the Examiner erred in finding that Niessner teaches a plurality of detector means for detecting control signals respecting said programming?

3. Has Appellant shown that the Examiner erred in finding that Niessner teaches a buffer/memory storage means for receiving and storing said detected control signals?

Regarding the second subsidiary issue, Appellant has not shown that the Examiner erred in finding that Niessner teaches a plurality of detector means for detecting control signals "respecting said programming." The term "respecting" is quite broad. Appellant has not presented any convincing evidence or argument that the Specification imparts a special meaning to this term. The relevant plain meaning of "respecting" is "concerning; about." *Webster's New World Dictionary Third College Edition* 1143 (1994).

The Examiner correctly found that the insertion data signals of Niessner concern the programming because they "identify how each of the distributed programs is to be routed through the network by providing control, locally, over the matrix switching circuitry." (Ans. 12; *see also* FF 1-3.) The Examiner also found that the IDS decoders detect and extract the insertion data signals. (Ans. 11; *see also* FF 1-3.) Thus, under the broadest reasonable interpretation of the claim consistent with the Specification, the insertion data signals and IDS decoders of Niessner meet the claimed "plurality of detector means for detecting control signals respecting said programming."

Regarding the third subsidiary issue, Appellant has not presented any convincing evidence or argument that the Examiner erred in finding that Niessner teaches a buffer/memory storage means for receiving and storing said detected control signals, as recited by claim 2. The Examiner correctly

found that Niessner teaches storing received IDS instructions (i.e., control signals) after decoding (i.e., detecting). (Ans. 17; FF 4.) Thus, under the broadest reasonable interpretation of the claim consistent with the Specification, this memory teaching of Niessner also teaches the recited buffer/memory storage means.

Nevertheless, Appellant's argument that the Examiner erred in rejecting claims 1 and 2 as being anticipated by Niessner is persuasive because Niessner does not teach "a first processor means operatively connected to said plurality of detector means for identifying each detected control signal as having been detected by a particular detector means," as claimed.

The Examiner found that the data processor of Niessner (see Fig. 3, FF 2) "detects each received control signal [IDS] that is directed to it by each of the decoders [5, 6, 7] and, in this way, 'identifies' each respective control signal as having been detected by 'a particular detecting means.'" (Ans. 13.)

We agree with Appellant that the Examiner's interpretation of Niessner reads the term "particular" out of the claim. Niessner does not expressly or inherently teach that the data processor identifies each detected IDS as having been detected by a particular one of the IDS detectors 5, 6, 7. Niessner's teaching that an IDS signal is received from one of several IDS detectors does not also teach identifying the particular IDS detector which detected the signal. (FF 2, 3.)

The Examiner also found that the data bus described by Niessner (see FF 3) teaches "identifying each detected control signal as being detected by

a particular detector means." (Ans. 14-15.) In particular, the Examiner found that the data bus "necessarily includes circuitry/programming ***for identifying*** (i.e. enabling) a particular one of the decoders to transfer a respective one of its received data signals thereto over said data bus during any given transfer cycle" (Ans. 14) because "[i]n systems that contain only one data processor, as in the case of the Niessner system, the data processor was typically configured to control all input/output activities over the bus thereby preventing 'conflicts' from occurring" (Ans. 14).

Appellant argues that "conflict prevention does not inherently require that the source of each device writing to the bus be identified" and therefore "it is not inherent that the data processor relied upon by the Examiner does in fact identify for any incoming signal which decoder detected the signal." (Reply Br. 12.)

Appellant's argument is convincing. Niessner does not mention conflict prevention in connection with its data bus, and does not provide any detail concerning the data bus that would lead to a conclusion that conflict prevention as described by the Examiner is inherent in that data bus. In short, the Examiner has not pointed to any convincing evidence that the data bus of Niessner expressly or inherently enables the identification of a detected control signal as having been detected by a particular detector means.

Accordingly, we conclude that Appellant has shown that the Examiner erred in rejecting claims 1 and 2 under 35 U.S.C. § 102(b).

Claims 6-8, 10, and 12.

With respect to claim 6, Appellant initially argues, similar to claim 1, that Niessner does not teach a control signal detector means for detecting control signals *respecting said programming*. (App. Br. 42-43.) This argument is not convincing for the reasons discussed with respect to claim 1.

Appellant further argues that "the Examiner overlooks the recited relationships between the claimed control signal detector means, the storage/transfer means, and the processor means" of claim 6. (App. Br. 43; Reply Br. 13.) Appellant argues that neither the memory of Niessner nor the data bus of Niessner teaches the storage/transfer means recited by claim 6. (Reply Br. 13.) In particular, Appellant argues that the memory of Niessner does not transfer at least a portion of said control signals for further processing (App. Br. 43; Reply Br. 13), that there is no teaching that the processor controls the transfer functions of the memory (App. Br. 43), and that the data bus of Niessner does not store control signals (Reply Br. 13).

Appellant also argues that the Examiner erred in finding (at Ans. 19-20) that the data bus could be the storage/transfer means used to transfer data between the control signal detector means and the processor means. (App. Br. 43-44.) Appellant notes that the Examiner found (at Ans. 19-20) that the data bus necessarily includes appropriate handshaking circuitry to control the transfer functions. (App. Br. 43-44.) Thus, Appellant argues that, given this finding regarding the handshaking circuitry, the processor of Niessner would not control the transfer functions of the data bus as required by the claim. (*Id*.) Instead, Appellant argues, the data bus would perform that function. (*Id*.)

With respect to claims 7, 8, 10 and 12, Appellant argues that the Examiner erred in rejecting these claims for the same reasons given with respect to claim 6. (App. Br. 44-48.) Regarding claim 12, Appellant also argues that the Niessner does not teach the recited processor means for controlling the transfer functions of the storage/transfer means in response to the control signals or local command. (App. Br. 48; Reply Br. 14-15.)

Appellant's arguments present the following issue:
Has Appellant shown that the Examiner erred in rejecting claims 6-8, 10 and 12 under 35 U.S.C. § 102(b) as being anticipated by Niessner?

The resolution of this issue turns on the following subsidiary issues:

1. Has Appellant shown that the Examiner erred in finding that Niessner teaches a storage/transfer means for receiving and storing said control signals and for transferring at least a portion of said control signals for further processing?

2. Has Appellant shown that the Examiner erred in finding that Niessner teaches a processor means for controlling the transfer functions of the storage/transfer means?

3. Has Appellant shown that the Examiner erred in finding that Niessner teaches a processor means for controlling the transfer functions of the storage/transfer means in response to the control signals or local command, as recited by claim 12?

Appellant's arguments that the Examiner erred in rejecting claims 6-8, 10, and 12 as being anticipated by Niessner are persuasive. We agree with Appellant that Niessner does not teach a storage/transfer means for receiving and storing said control signals and for transferring at least a portion of said

control signals for further processing. We also agree that Niessner does not teach a processor means for controlling the transfer functions of the storage/transfer means, and therefore does not teach a processor means for controlling the transfer functions of the storage/transfer means in response to the control signals or local command.

The Examiner found that the memory of Niessner (see FF 4) or, alternatively, the data bus of Niessner (see FF 3), meets the storage/transfer means limitation. (Ans. 19-20.) The Examiner also found that the processor shown in Figure 3 of Niessner implicitly provides control for the transfer functions of the data bus and memory. (Ans. 21.) We do not agree.

Regarding the memory, Niessner teaches that the IDS instructions are stored to protect against a "failure of the mains supply." (FF 4.) However, Niessner is silent with respect to the memory transferring at least a portion of the IDS instructions for further processing, as required by claims 6-8, 10, and 12. While it may be possible that the memory transfers at least a portion of the IDS instructions for further processing, the Examiner has not convincingly demonstrated that the memory inherently performs this function. In addition, Niessner is silent with respect to the data bus storing IDS instructions, and the Examiner has not convincingly demonstrated that the memory inherently performs this function.

Although a data processor is disclosed in Figure 3 (FF 2), Niessner is silent as to the functions performed by that data processor. In particular, Niessner does not teach that the processor controls transfer functions of the memory or the data bus. While it may be possible that the data processor could control transfer functions of the memory or data bus, the Examiner has

not convincingly demonstrated that the data processor inherently performs this function.

Because the Examiner has not shown that Niessner teaches a processor means for controlling the transfer functions of the storage/transfer means, the Examiner also has not shown that Niessner teaches a processor means for controlling the transfer functions of the storage/transfer means in response to the control signals or local command, as recited by claim 12.

Accordingly, we conclude that Appellant has shown that the Examiner erred in rejecting claims 6-8, 10, and 12 under 35 U.S.C. § 102(b).

§ 102(b) Rejection - Summers

Appellant argues that Summers does not teach the step of "thereby to cause said intermediate input means to input data of said selected data unit to at least one selected processor at said selected time," as recited by claim 23. (App. Br. 52-53; Reply Br. 15.) In particular, Appellant argues that "under the claim language, the transmission of selected information of the selected data unit by the memory means causes the intermediate input means to input data" (App. Br. 52) but "the data storage means 36 of Summers does not cause elements 14-26 of Summers [i.e., the intermediate input means] to do anything" (*id*.). "In FIG. 2 of Summers, one can see very plainly that the data storage means 36 *receives* signals from elements 14-26 [i.e., the intermediate input means] but does not *send* any signals to elements 14-26." (*Id*.)

Appellant's arguments present the following issue:

Has Appellant shown that the Examiner erred in rejecting claim 23 under 35 U.S.C. § 102(b) as being anticipated by Summers?

The resolution of this issue turns on the following subsidiary issue:

Has Appellant shown that the Examiner erred in finding that Summers teaches the step of "thereby to cause said intermediate input means to input data of said selected data unit to at least one selected processor at said selected time"?

Appellant's arguments that the Examiner erred in rejecting claim 23 as being anticipated by Summers are persuasive. We agree with Appellant that Summers does not teach the step of "thereby to cause said intermediate input means to input data of said selected data unit to at least one selected processor at said selected time," as claimed.

The Examiner found that elements 14-26 shown in Figure 2 of Summers (see FF 6) correspond to the recited "intermediate input means" and element 36 corresponds to the recited "memory means." (Ans. 27.) The Examiner then found that the intermediate input means (elements 14-26) input selected data units "into at least one selected 'processor means' (e.g., 'such as a computer') via a 'memory means' (e.g., 36 of figure 2) that is associated with the 'intermediate input means'." (Ans. 27.) According to the Examiner, "*Thereby*, this configuration enables the 'intermediate input means' to input the selected data unit to the 'processor means' (e.g., to the computer) at [the] 'selected time' by permitting the selected data units . . . to be held/delayed in said associated 'memory means' until said selected time." (Ans. 27-28.)

The Examiner relied upon the teachings of Summers found at column 7, lines 56-68 to make the above-noted findings. (Ans. 27-28.) This portion of Summers teaches that supplemental data could be used "to program a data storage means 36 (FIG. 2) such as a computer at the receiving end." (FF 7.) The supplemental data can be stored and used at a later time, such as a pre-selected time. (FF 7.)

According to the language of claim 23, the step of "causing said memory means to transmit selected information of said selected data unit at a selected time" thereby causes the intermediate input means to input data to at least one selected processor at a selected time. Summers does not teach this interaction. Instead, Figure 2 of Summers merely shows that the data storage means 36 receives data from elements 14-26. (FF 6.) There is no indication that causing the data storage means 36 to transmit selected information thereby causes elements 14-26 to input data to at least one selected processor at a selected time.

In addition, claim 23 requires the intermediate input means to input data to at least one selected processor at a selected time. The Examiner did not find that the intermediate input means (elements 14-26) inputs data directly to at least one selected processor. Instead, the Examiner found that the intermediate input means inputs data to a memory means, where the data is held or delayed until a predetermined time when the data is then input to at least one selected processor. However, the Examiner's interpretation is not consistent with the plain language of the claim which requires the intermediate input means, not the memory means, to input data to the at least one selected processor.

Accordingly, we conclude that Appellant has shown that the Examiner erred in rejecting claim 23 under 35 U.S.C. § 102(b).

§ 102(b) Rejection - Haselwood

Appellant argues that the detectors of Haselwood are not pre-programmed to detect program identification information, as recited by claim 26. (App. Br. 54; Reply Br. 16.) Appellant points out that the Specification of the '414 patent distinguishes Haselwood and other prior art references at column 6, lines 35-40, by stating that the prior art

> has assumed monitored signals of particular format in particular transmission locations and has lacked capacity to vary formats or locations or to distinguish and act on the absence of signals or to interpret and process in any fashion signals that appear in monitored locations that are not monitored signals.

Appellant argues that, in contrast to the claimed detectors pre-programmed to detect program identification information, "the decoder 28 in Haselwood recovers information regardless of what that information is" (App. Br. 54) and "all signals in Haselwood are treated in an identical manner by the decoder 28" (App. Br. 54).

Appellant's arguments present the following issue:

Has Appellant shown that the Examiner erred in rejecting claim 26 under 35 U.S.C. § 102(b) as being anticipated by Haselwood?

The resolution of this issue turns on the following subsidiary issue:

Has Appellant shown that the Examiner erred in finding that Haselwood teaches a detector pre-programmed to detect program identification information?

Appellant's arguments that the Examiner erred in rejecting claim 26 as being anticipated by Haselwood are persuasive. We agree with Appellant that Haselwood does not teach a detector pre-programmed to detect program identification information, as claimed.

The Examiner found that the detector of Haselwood "must be 'preprogrammed,' . . . to operate to detect the embedded data . . . in order to be detected (as described)." (Ans. 30.)

However, Haselwood teaches that the decoder 28 recovers encoded information and applies that information to mini-computer 30. (FF 10; *see also* FF 13.) Haselwood does not teach that the decoder 28 is pre-programmed to detect program identification information. Instead, Haselwood teaches that all information recovered by the decoder is applied to the mini-computer. In addition, an interpretation that the decoders 28 of Haselwood were pre-programmed to detect program identification information would be contrary to the above-noted portion of Appellant's Specification.

Furthermore, we note that the Examiner found that Haselwood's teaching concerning the playing of a delayed broadcast (see FF 12) "implicitly/necessarily" includes the steps recited in claim 26 of causing a receiving station to record a selected television program unit, causing the station to position the start of the program unit at the play head of a video player, and causing the player to play and transmit at a selected time thereby to cause the selected station to transmit the selected unit at the selected time. (Ans. 29-30.) However, although such steps may possibly be performed by

Haselwood, the Examiner has not convincingly demonstrated why these steps are inherently performed by Haselwood.

Accordingly, we conclude that Appellant has shown that the Examiner erred in rejecting claim 26 under 35 U.S.C. § 102(b).

§ 102(b) Rejection - Watson

The Examiner found that Watson qualifies as prior art under 35 U.S.C. § 102 because claim 7 is not entitled to claim the benefit of the 1981 application filing date. (Ans. 7, 31.)

However, as discussed *supra*, Appellant has shown that the Examiner erred in finding that claim 7 is not entitled to claim the benefit of the 1981 application filing date. Therefore, Watson does not qualify as prior art.

Accordingly, we conclude that Appellant has shown that the Examiner erred in rejecting claim 7 as being anticipated by Watson.

§ 103 Rejection - Niessner / Hutt / Etkin

The Examiner found that the subject matter of claims 5, 9, and 11 would have been obvious over Niessner, Hutt, and Etkin. (Ans. 33-35.) The Examiner cited Etkin "because it evidences the fact that it was known to have been desirable to have used automated programming recording techniques to control the transfer of programming between stations during the 'dark' hours [note part '8.' in the center column of page 32]" (Ans. 34) and cited Hutt "because it evidences the fact that it was known to have used the IDS data described in the Niessner publication for many control purposes

beyond that which was explicitly described in the Niessner publication" (Ans. 34-35).

Appellant argues that the Examiner erred in rejecting the subject matter of claims 5, 9, and 11 as being obvious over Niessner, Hutt, and Etkin for the same reasons discussed above with respect to claims 1, 2, and 6. (App. Br. 57-59.) In particular, Appellant argues that Hutt and Etkin do not remedy the above noted deficiencies of Niessner. (*Id*.)

Appellant's arguments are persuasive. As noted above with respect to claims 1, 2, and 6, Niessner does not teach a first processor means for identifying each detected control signal as having been detected by a particular detector. Nor does Niessner suggest this subject matter. In addition, there is no evidence before us to show that this limitation is a predictable variation of the prior art. Nor is there evidence before us to show that this limitation would be common sense or a creative step that a person of ordinary skill in the art would employ. Furthermore, Hutt and Etkin fail to remedy the deficiencies of Niessner.

Accordingly, we conclude that Appellant has shown that the Examiner erred in rejecting claims 5, 9, and 11 under 35 U.S.C. § 103(a).

CONCLUSIONS

Based on the findings of facts and analysis above, we conclude that:

(1) Appellant has shown that the Examiner erred in finding that claim 7 is not entitled to the benefit of the effective filing date of the 1981 application.

(2) Appellant has shown that the Examiner erred in rejecting claims 1, 2, 6-8, 10, and 12 as being anticipated by Niessner.

(3) Appellant has shown that the Examiner erred in rejecting claim 23 as being anticipated by Summers.

(4) Appellant has shown that the Examiner erred in rejecting claim 26 as being anticipated by Haselwood.

(5) Appellant has shown that the Examiner erred in rejecting claim 7 as being anticipated by Watson.

(6) Appellant has shown that the Examiner erred in rejecting claims 5, 9, and 11 as being obvious over Niessner, Hutt, and Etkin.

DECISION

The rejection of claims 1, 2, 5-12, 23, and 26 is reversed.

REVERSED

MAT

Counsel for Patent Owner:

Goodwin Procter LLP
901 New York Avenue, N.W.
Washington, DC 20001

Counsel for Third Party Requester:

Banner & Witcoff
1001 G Street, N.W.
Washington, DC 20001