UNITED STATES PATENT AND TRADEMARK OFFICE

BEFORE THE BOARD OF PATENT APPEALS
AND INTERFERENCES

Ex parte ALISTAIR HAMILTON, SUDHIR BHATIA,
and JORG SCHLIEFFERS

Appeal 2008-5142
Application 10/930,503
Technology Center 2600

Decided: January 5, 2009

Before KENNETH W. HAIRSTON, JOHN A. JEFFERY, and THOMAS S. HAHN, *Administrative Patent Judges*.

JEFFERY, *Administrative Patent Judge*.

DECISION ON APPEAL

Appellants appeal under 35 U.S.C. § 134 from the Examiner's rejection of claims 1-3, 6-13, and 16-21. We have jurisdiction under 35 U.S.C. § 6(b). We affirm.

STATEMENT OF THE CASE

Appellants invented an accessory for a mobile computing device. The accessory includes plural interfaces, one of which mates with a corresponding interface on the mobile device. The other accessory interface is mounted such that it faces outward when the device and accessory are mated.[1] Claim 1 is illustrative with the key disputed limitation emphasized for clarity:

> 1. An accessory for a mobile computing device, the device having a first interface disposed on a proximal portion of the device, comprising:
>
> a second interface disposed on a distal surface of the accessory and complementing the first interface for mating therewith to enable communication between the device and the accessory; and
>
> a third interface substantially similar to the first interface for mating with accessories adapted to mate with the first interface, wherein the third interface is mounted on a first outward facing surface of the accessory so that, when the first and second interfaces are mated, the third interface faces outward, wherein *a profile of the proximal portion of the accessory substantially matches that of the proximal portion of the device*.

The Examiner relies on the following prior art references to show unpatentability:

Barvesten	US 6,714,802 B1	Mar. 30, 2004
von Mueller	US 6,944,782 B2	Sep. 13, 2005 (filed Feb. 12, 2002)

1. The Examiner rejected claims 1-3, 6, 8-13, 16, 18, and 19 under 35 U.S.C. § 102(e) as anticipated by Barvesten (Ans. 3-6).

[1] *See generally* Spec. ¶ 0004; Figs. 1, 2a, and 2b.

2. The Examiner rejected claims 20 and 21 under 35 U.S.C. § 103(a) as unpatentable over Barvesten (Ans. 6-7).
3. The Examiner rejected claims 7 and 17 under 35 U.S.C. § 103(a) as unpatentable over Barvesten and von Mueller (Ans. 7-8).

Rather than repeat the arguments of Appellants or the Examiner, we refer to the Briefs and the Answer[2] for their respective details. In this decision, we have considered only those arguments actually made by Appellants. Arguments which Appellants could have made but did not make in the Briefs have not been considered and are deemed to be waived. *See* 37 C.F.R. § 41.37(c)(1)(vii).

THE ANTICIPATION REJECTION

Regarding the Examiner's anticipation rejection of representative claim 1,[3] Appellants argue that Barvesten does not disclose that a profile of the proximal portion of the accessory substantially matches that of the proximal portion of the device as claimed. According to Appellants,

---

[2] Throughout this opinion, we refer to (1) the Appeal Brief filed June 19, 2007; (2) the Examiner's Answer mailed Aug. 7, 2007; and (3) the Reply Brief filed Oct. 4, 2007.

[3] Appellants present arguments for independent claim 1, but do not separately argue dependent claims 2, 3, 6, 8, and 9 (App. Br. 6-7). Although Appellants nominally argue independent claims 10 and 11 (and dependent claims 12, 13, 16, 18, and 19) separately (App. Br. 7-8), these arguments merely reiterate the same arguments made with respect to claim 1 and pertain to commensurate limitations. Accordingly, we consider independent claims 1, 10, and 11 (and dependent claims 2, 3, 6, 8, 9, 12, 13, 16, 18, and 19) as a group and select claim 1 as representative. *See* 37 C.F.R. § 41.37(c)(1)(vii).

Barvesten's accessory 2 has a larger profile than that of device 1 (App. Br. 7).

The Examiner acknowledges that the profile of the proximal portion of Barvesten's accessory appears to be "slightly thicker" than that of the device. The Examiner, however, notes that there are similarities in these respective proximal portions, namely with respect to the connectors associated with those portions and the width of the proximal portions (Ans. 8-9).

Appellants, however, contend that in light of definition of the term "profile," the recited accessory profile must be interpreted to encompass both width and thickness. As such, Appellants argue, the proximal portions of Barvesten's accessory and device do not substantially match since the accessory's proximal portion is not merely *slightly* thicker than that of the device as the Examiner contends, but rather *significantly* thicker (Reply Br. 2-3).

The issue before us, then, is as follows:

ISSUE

Have Appellants shown that the Examiner erred in rejecting claim 1 under § 102 by finding that the profile of the proximal portion of the accessory in Barvesten substantially matches that of the associated mobile computing device as claimed?

FINDINGS OF FACT

The record supports the following findings of fact (FF) by a preponderance of the evidence:

1. Barvesten discloses a portable communication apparatus 1 (e.g., a mobile telephone) and an accessory device 2 detachably connected thereto (Barvesten, col. 3, ll. 29-40; Abstract; Fig. 1).

2. The accessory device 2 comprises two separate housing portions 20 and 30 that are hingedly coupled together (Barvesten, col. 4, ll. 7-11; Figs. 2 and 3).

3. The mobile phone comprises an accessory connector 15 at the lower end of its housing (Barvesten, col. 3, ll. 63-67; Fig. 1).

4. The accessory device has an external connector detachably inserted in the connector 15 of the mobile telephone (Barvesten, col. 4, ll. 1-6; col. 5, ll. 10-14).

5. The accessory device has another connector 25 at lower end of the first housing portion 20. Connector 25 is essentially identical to the connector 15 on the mobile telephone (Barvesten, col. 4, ll. 21-27; Figs. 2 and 3).

PRINCIPLES OF LAW

Anticipation is established only when a single prior art reference discloses, expressly or under the principles of inherency, each and every element of a claimed invention as well as disclosing structure which is capable of performing the recited functional limitations. *RCA Corp. v. Appl. Dig. Data Sys., Inc.*, 730 F.2d 1440, 1444 (Fed. Cir. 1984); *W.L. Gore & Assoc., Inc. v. Garlock, Inc.*, 721 F.2d 1540, 1554 (Fed. Cir. 1983).

In rejecting claims under 35 U.S.C. § 103, it is incumbent upon the Examiner to establish a factual basis to support the legal conclusion of

obviousness. *See In re Fine*, 837 F.2d 1071, 1073 (Fed. Cir. 1988). In so doing, the Examiner must make the factual determinations set forth in *Graham v. John Deere Co.*, 383 U.S. 1, 17 (1966).

If the Examiner's burden is met, the burden then shifts to the Appellants to overcome the prima facie case with argument and/or evidence. Obviousness is then determined on the basis of the evidence as a whole and the relative persuasiveness of the arguments. *See In re Oetiker*, 977 F.2d 1443, 1445 (Fed. Cir. 1992).

During examination of a patent application, a claim is given its broadest reasonable construction "in light of the specification as it would be interpreted by one of ordinary skill in the art." *In re Am. Acad. Of Sci. Tech. Ctr.*, 367 F.3d 1359, 1364 (Fed. Cir. 2004).

ANALYSIS

We begin our analysis by noting that Appellants do not dispute the Examiner's findings regarding Barvesten's disclosure of the three recited interfaces and the claimed structural and functional relationship of these interfaces. Rather, Appellants dispute the Examiner's finding that the profiles of the proximal portions of the accessory and device in Barvesten substantially match. We therefore focus our discussion on this limitation.

We further note that claim 1 does not require that these profiles match exactly, but rather that they *substantially* match. Given this broader recitation, we find no error in the Examiner's findings with respect to Barvesten regarding the "substantially matching" profiles of the accessory and device given their structural similarities in width and connector structure as the Examiner indicates (Ans. 8). Even if we assume, without deciding,

that a profile must account for thickness in addition to width under the definitions provided by Appellants (Reply Br. 2-3), the scope and breadth of the claim nonetheless does not preclude the structure of Barvesten, notwithstanding the thickness differences between the device and the accessory.

In short, if the claim specified that these profiles matched, then we would have a different situation before us. But here, all that is required is that the profiles *substantially* match—a broader recitation that allows for some variance in the respective profiles. As such, we are not persuaded that the Examiner erred in finding this limitation fully met by the structure of Barvesten.

We also find this limitation fully met by Barvesten for yet another reason. Significantly, apart from merely reciting a "proximal portion" with respect to the device and accessory, claim 1 does not further detail any structural aspects of these respective proximal portions. Nor does Appellants' Specification specifically define what is meant by a "proximal portion." Accordingly, we construe this term with its broadest reasonable interpretation in light of the Specification. *Am. Acad.*, 367 F.3d at 1364.

Turning to Barvesten, the accessory device 2 comprises two separate housing portions 20 and 30 that are hingedly coupled together (FF 2). This coupling is shown in Figure 2 and reproduced below:

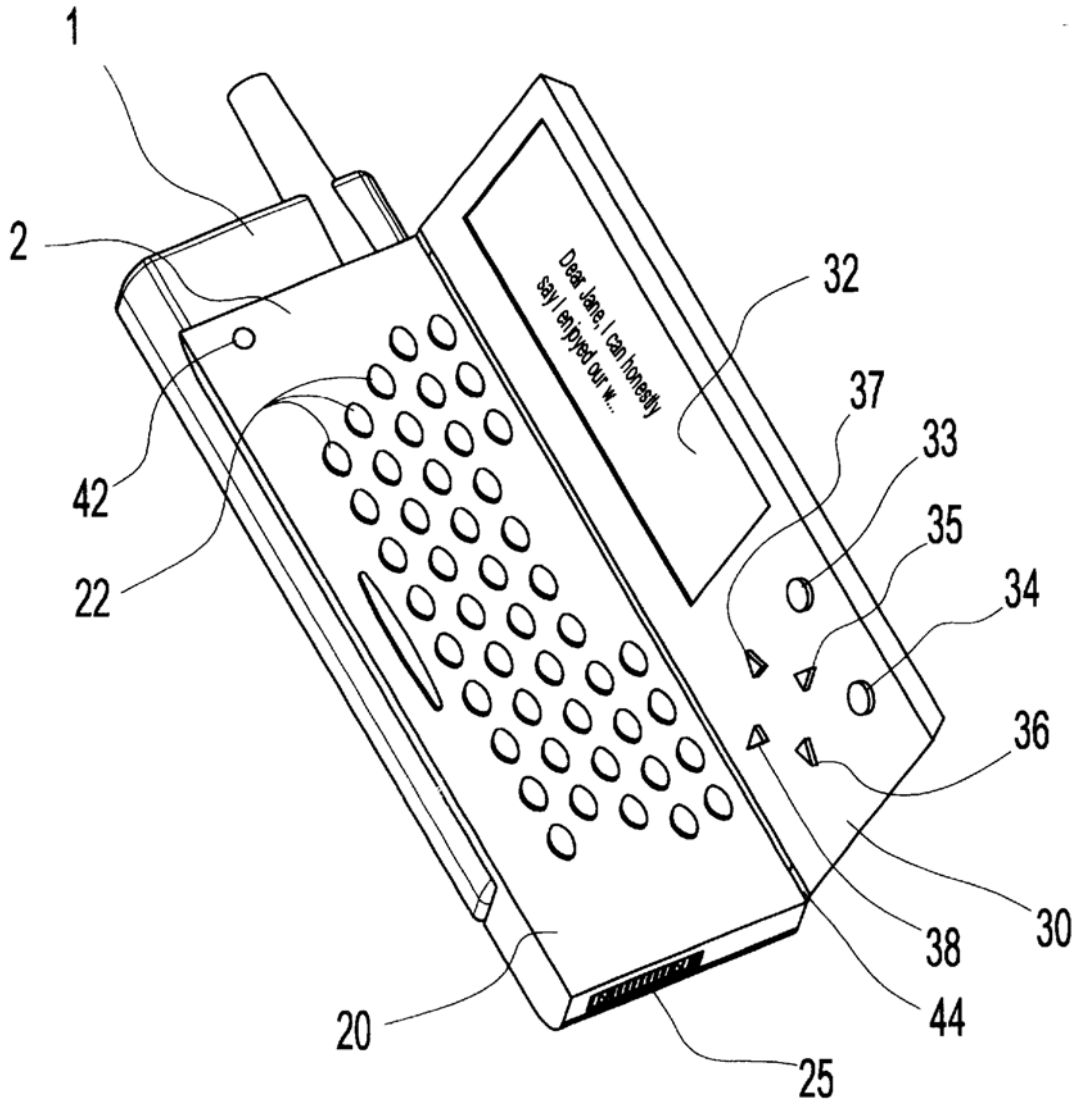

Figure 2 of Barvesten Showing Hinged Coupling of Housing Portions of the Accessory Device

From this perspective, the profile of the proximal portion of the accessory's first housing portion 20—the housing portion that contains the connector 25 (FF 5)—substantially matches that of the device 1. Although this proximal portion of the housing portion 20 is slightly thicker than that of the device, its profile nonetheless *substantially* matches that of the device to which it is connected, even under Appellants' definitions in the Reply Brief

(Reply Br. 2-3). This relationship can also be seen in Figure 3 reproduced below:

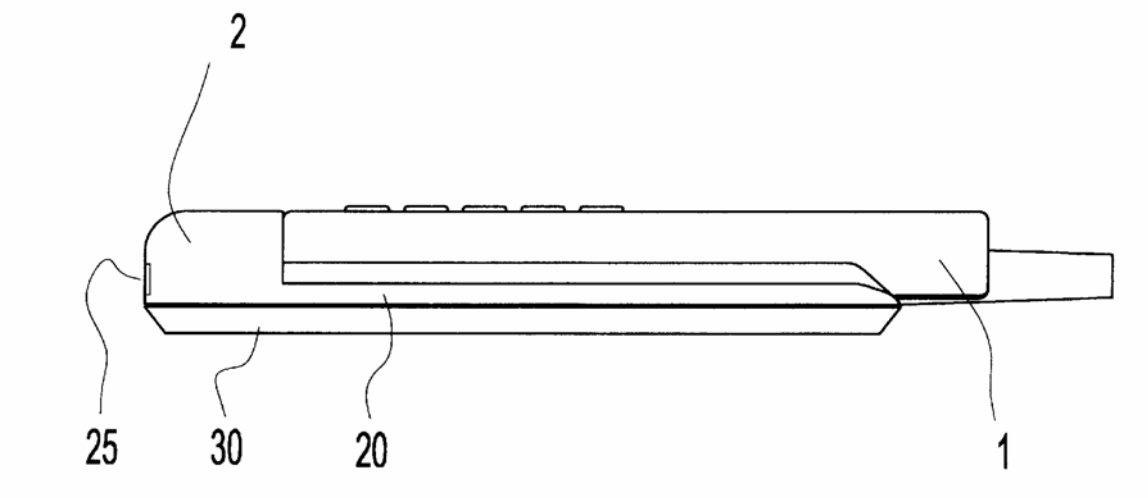

Figure 3 of Barvesten Showing Relative Thicknesses of Proximal Portions of Housing Portion 20 and Device 1

In short, nothing in the claim precludes the "proximal portion" of the accessory to be defined with respect to the housing portion 20 of the accessory that contains the connector 25. As such, the profile of this proximal portion substantially matches that of the device and therefore fully meets the disputed limitation.

For the foregoing reasons, Appellants have not persuaded us of error in the Examiner's rejection of representative claim 1. Therefore, we will sustain the Examiner's rejection of that claim, and claims 2, 3, 6, 8-13, 16, 18, and 19 which fall with claim 1.

THE OBVIOUSNESS REJECTIONS

Likewise, we will sustain the Examiner's obviousness rejections of (1) claims 20 and 21 over Barvesten, and (2) claims 7 and 17 over Barvesten and von Mueller. We find that Appellants have not particularly pointed out

errors in the Examiner's reasoning to persuasively rebut the Examiner's prima facie case of obviousness, but merely reiterate that the cited prior art fails to disclose that the profiles of the proximal portions of the accessory and the device substantially match as claimed (App. Br. 8-10; Reply Br. 4). We are therefore not persuaded that the Examiner erred in rejecting these claims for the same reasons discussed above in connection with claim 1. The obviousness rejections are therefore sustained.

CONCLUSIONS OF LAW

Appellants have not shown that the Examiner erred in rejecting claims 1-3, 6, 8-13, 16, 18, and 19 under § 102. Nor have Appellants shown that the Examiner erred in rejecting claims 7, 17, 20, and 21 under § 103.

ORDER

The Examiner's decision rejecting claims 1-3, 6-13, and 16-21 is affirmed.

No time period for taking any subsequent action in connection with this appeal may be extended under 37 C.F.R. § 1.136(a)(1)(iv).

AFFIRMED

Eld

FAY KAPLUN & MARCIN, LLP/ MOTOROLA
150 BROADWAY SUITE 702
NEW YORK, NY 10038