UNITED STATES PATENT AND TRADEMARK OFFICE

BEFORE THE BOARD OF PATENT APPEALS
AND INTERFERENCES

Ex parte ROBERT A. WESSELS, Jr. and ROBERT BRIAN FRANKLIN

Appeal 2008-5915
Application 10/872,226
U.S. Patent Publication 2005/0281517 A1
Technology Center 2800

Decided: December 4, 2008

Before: FRED E. McKELVEY, *Senior Administrative Patent Judge*, RICHARD TORCZON and MICHAEL P. TIERNEY, *Administrative Patent Judges*.

McKELVEY, *Senior Administrative Patent Judge*.

DECISION ON APPEAL

1 **A. Statement of the case**

2 CommScope Properties, LLC ("**CSP**"), the real party in interest,
3 seeks review under 35 U.S.C. § 134(a) of a final rejection (28 September
4 2006) of claims 1-3 and 5-19 as being unpatentable under 35 U.S.C. § 103
5 over (**1**) Navé (Nave), U.S. Patent 5,343,549, (**2**) Pearce, U.S. Patent

6,108,267, (**3**) Bottoms, U.S. patent 5,495,546, (**4**) Taylor, U.S. Patent 5,539,851, and (**5**) Anelli, U.S. Patent Publication 2002/0041744 A1.

All the prior art relied upon by the Examiner is prior art under 35 U.S.C. § 102(b).

We have jurisdiction under 35 U.S.C. § 134(a).

We affirm as to claim 1-2, 5, 7, 11-13 and 18-19 and remand as to claims 3, 6, 8-10, 14-17.

Our affirmance is designated as a new ground of rejection.

B. Findings of fact

The following findings of fact are believed to be supported by a preponderance of the evidence. References to the CSP specification are to U.S. Patent Publication 2005/0281517 A1. To the extent that a finding of fact is a conclusion of law, it may be treated as such. Additional findings as necessary appear in the Discussion portion of the opinion.

Background

Fiber optic cables include optical fibers that transmit information in cable television, computer, power, and telephone systems. Specification, ¶ 0002.

The prior art of record reveals that fiber optic cables have utility in other fields. *See*, *e.g.*, Pearce.

Optical fibers are relatively fragile and should be protected during the manufacture, handling and installation of cables. A variety of protective measures are often provided in cables containing optical fibers. For example, to allow the cable to move or be flexed a certain degree by external

forces or by thermal expansion and contraction without stressing or microbending the optical fibers, the optical fiber or fibers are typically enclosed in a plastic buffer tube having a bore of a cross-sectional area larger than the cross-sectional area of the fiber or fibers within it—an arrangement referred to as a "loose" configuration. Specification, ¶ 0002.

A "loose-tube" optical fiber cable may include one or several buffer tubes, each containing one or a plurality of optical fibers. The plurality of optical fibers may be in the form of individual fibers, an optical fiber ribbon or a stack of optical fiber ribbons. Often, when a single buffer tube is employed (a "central tube" cable), strength members extending the length of the cable are embedded in the buffer tube or outer jacket. When multiple buffer tubes are employed (a "stranded loose tube" cable), they are typically arranged about a central strength member. Specification, ¶ 0003.

In either instance, it is typically desirable that the material of a buffer tube have a relatively high Young's modulus, which can provide the buffer tube with high tensile and compressive resistance. Also, the material should have a relatively low coefficient of thermal expansion. It is also generally desirable that the buffer tube have a relatively low weight. Typical materials for use in buffer tubes include polybutyl terephthalate (PBT), nylon, polyethylene (PE), and polypropylene (PP). According to CSP, each of these materials is said to have some disadvantages. For example, PBT is said to be susceptible to hydrolysis that leads to a loss in strength, too rigid for some applications, and relatively expensive. According to CSP, nylon tends to lack resistance to hydrolysis and is susceptible to water absorption,

which can adversely affect optical and mechanical properties and dimensional stability. Further according to CSP, while PE tends to be a lower cost material, PE alone has poor thermal and mechanical properties and typically requires a significant amount of filler material. PP is said to shrink significantly after processing, which is said to negatively impact excess fiber length, and may also require significant filler material. Specification, ¶ 0004.

Copolymers and blends have also been used in buffer tubes. For example, a PE/PP copolymer employed for some buffer tubes is typically produced with a nucleating additive to reduce its thermal expansion coefficient. However, the copolymer is said to maintain some of the negative performance and processing properties of the individual polymers. A blend of nylon-6 and polyethylene also has been proposed. Specification, ¶ 0005.

According to CSP, the foregoing background is said to demonstrate the desirability of continuing to search for additional materials for use in buffer tubes. Specification, ¶ 0006.

<u>The CSP invention</u>

The CSP invention relates generally to fiber optic cable, and more specifically to buffer tubes for fiber optic cable. Specification, ¶ 0001.

CSP Fig. 1, reproduced below, illustrates a stranded loose tube cable according to the invention.

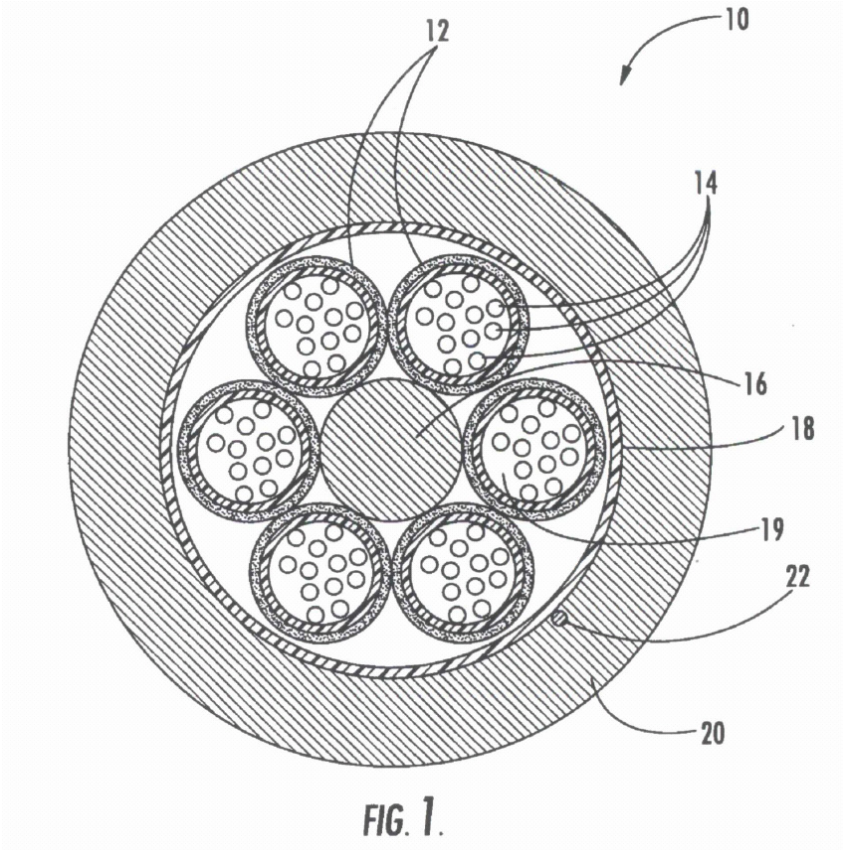

Fig.1 depicts a cross-sectional view of a fiber optic cable

Fig. 1 illustrates a cross-sectional view of a stranded loose tube cable **10**. Specification, ¶ 0011. The cable **10** includes a plurality of buffer tubes **12**, each of which houses multiple optical fibers **14**, stranded about a central strength member **16**. A core wrap **18** (which is not a claimed feature) may be wrapped around the buffer tube **14**. A protective outer jacket **20** is disposed over the core wrap **18**. An optional ripcord **22** (not a claimed feature) is provided near the interface of the wrap **18** and the outer jacket **20**. Water-blocking gel **19** (not a claimed feature) or other water-blocking material is typically disposed within the buffer tubes **12**, and may

also be disposed on the exterior of the buffer tubes **14**, within the core wrap **18**, if desired. Specification, ¶ 0017.

The optical fibers **14** are long, slender strands that are capable of carrying and propagating an optical signal. Specification, ¶ 0018.

Optical fibers having a thickness between about 200 and 300 microns are preferred. Specification, ¶ 0019.

The central strength member **16** provides rigidity to the cable **10**. Specification, ¶ 0020.

CSP Fig. 3 is reproduced below.

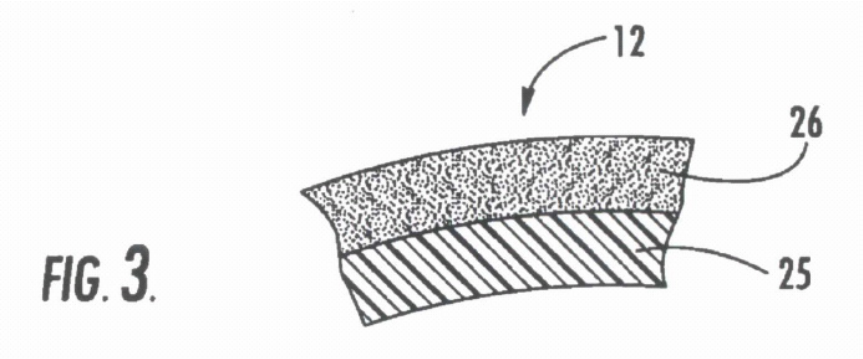

Fig. 3 depicts an enlarged section view of a buffer tube

Referring to CSP Fig. 1 and CSP Fig. 3, at least one, and preferably all, of the buffer tubes **12** are of a multi-layer construction. More specifically, the buffer tubes **12** include an inner layer **25** formed of a first polymeric material and an outer layer **26** formed of a second polymeric material that differs from the first polymeric material. Specification, ¶¶ 0013 and 0022.

According to CSP, a multi-layer construction can provide satisfactory performance while addressing some of the shortcomings observed in prior

art buffer tubes of unitary, single-material construction. Specification, ¶ 0022.

In the embodiment illustrated in Fig. 3, the inner layer **25** of the buffer tube **12** comprises PBT, and the outer layer **26** comprises PE (typically MDPE or HDPE—medium density and high density polyethylene). The PBT of the inner layer **25**, which has a lower thermal expansion coefficient than does PE, is said to significantly influence the thermal expansion coefficient of the entire buffer tube **12** such that it is acceptable for use in buffer tubes. According to CSP, the PBT of the inner layer **25** can provide crush resistance to the buffer tube **25**. Typically, a PBT material suitable for use with the present invention has a Young's modulus of between about 300,000 and 400,000 psi and a coefficient of thermal expansion of between about 4.8×10^{-5} and 6.6×10^{-5} in/in ºF. The inner layer **25** is described as being typically between about 0.012 and 0.028 inches in thickness when used in the buffer tube **12**.

In the Fig. 3 embodiment, PE comprising the outer layer **26** of the buffer tube **12** typically has a lower Young's modulus than does the PBT. As a result, according to CSP, thereby reducing the overall rigidity of the buffer tube **12**, consequently improving handling of the cable **10**. The PBT of the inner layer **25** is said to help to provide the necessary crush resistance for the buffer tube **12**. Foaming of the PE of the outer layer **26** is said to reduce weight without a considerable reduction in strength. Exemplary foaming techniques are said to be discussed in U.S. Patent 6,037,545 (Fox)

and U.S. Patents 5,959,245 and 6,137,058 (both to Moe)—a review of these three patents shows that they deal with coaxial cable. Moreover, the use of PE, which is typically less expensive than PBT, can reduce the overall material cost of the buffer tube **12**.

An exemplary cable is set out in Table 1. Specification, ¶ 0032.

Table 1

Component	Material	Diameter (in.)
Optical Fiber	Glass	0.010
Strength Member	GRP	0.125
Buffer Tubes	PBT/PE	0.118
Inner Layer	PBT (0.007 in thick)	0.345
Outer Layer	Foamed PE (0.013 in thick)	0.360
Core Wrap	Water Swellable Matrix	0.370
Jacket	Polyethylene (0.060 in thick)	0.490

GRP means glass reinforced plastic. Specification, ¶ 0020:4.

A cable as described is said to have the performance properties set forth in Table 2.

Table 2

Property	Value
Crush Resistance	≥ 44 N/m
Operating Temperature	-40 ºC. to +70 ºC
Attenuation	.35/.25 dB/km at 1310/1550 nm wavelength

The specification does not describe the significance of the data set out in Table 2.

Alternative embodiments of the multi-layer buffer tubes **12** are illustrated in CSP Fig. 4 and CSP Fig. 5.

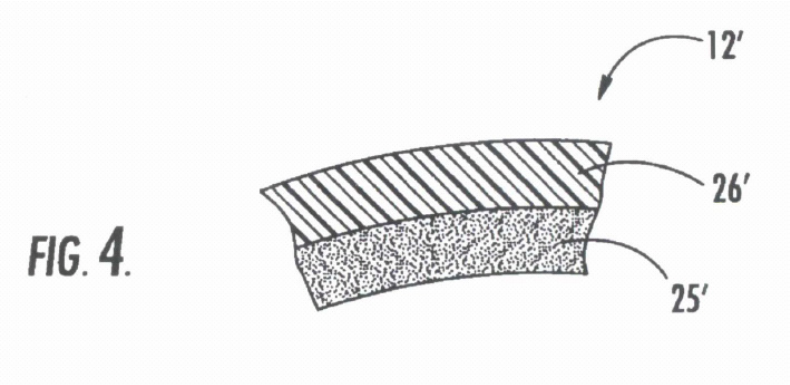

FIG. 4.

Fig. 4 depicts an alternate embodiment of a buffer tube

In the embodiment illustrated in CSP Fig. 4, the buffer tube **12'** has an inner layer **25'** and an outer layer **26'**, wherein the inner layer **25'** is formed of the polyolefin materials (preferably a foamed material), and the outer layer **26'** is formed of the materials set forth above for the inner layer **25** of Fig. 3. Specification, ¶ 0036.

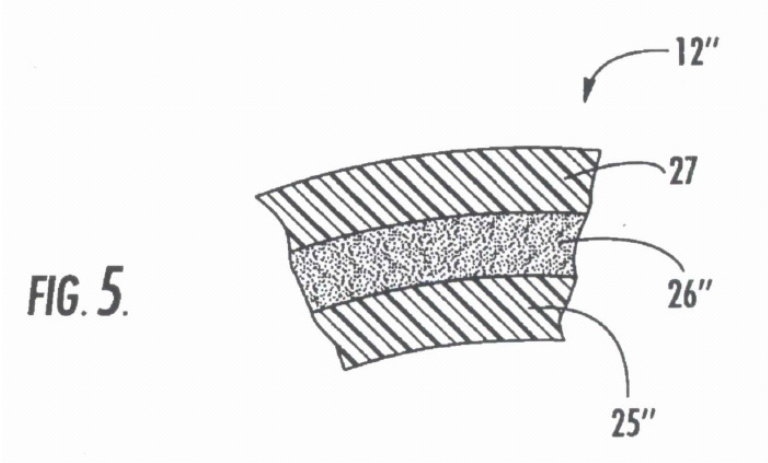

FIG. 5.

Fig. 5 depicts another alternative embodiment of a buffer tube

In the buffer tube embodiment illustrated in CSP Fig. 5, the buffer tube **12"** has an inner layer **25"**, an intermediate layer **26"**, and an outer layer **27**. Adjacent layers should be formed of different materials. In one embodiment, the inner layer **25"** is formed of PBT, PC (polycarbonate) or nylon (with PBT being preferred), the intermediate layer **26"** is formed of foamed polyolefin, and the outer layer **27** is formed of solid PBT, PP or PE.

Claims on appeal

Claim 1, which we reproduce from the claim appendix on page 9 of the Appeal Brief, reads (numbers from CSP Fig. 1 and CSP Fig. 3, some indentation and bracketed matter added):

> A fiber optic cable **10**, comprising:
>
> [1] a plurality of buffer tubes **12**, at least one of the buffer tubes including therein an optical fiber **14** in a loose configuration, the at least one buffer tube comprising:
>
> [a] a radially inward first layer **25** [Fig. 3] formed into an elongate cylinder, the first layer being formed of a first polymeric material; and
>
> [b] a radially outward second layer **26** [Fig. 3] formed into an elongate cylinder that circumferentially overlies the radially inner layer **25**, the second layer **26** being formed of a second polymeric material that differs from the first material;
>
> [2] wherein at least one of the first and second layers is foamed;
>
> [3] the fiber optic cable further comprising:

[a] a central strength member **16** positioned within the plurality of buffer tubes **12**; and

[b] an outer jacket **20** surrounding the strength member **16** and the plurality of buffer tubes **12**.

Other claims are reproduced later in this opinion

Prior art

(1) Nave

Fig. 1 of Nave is reproduced below.

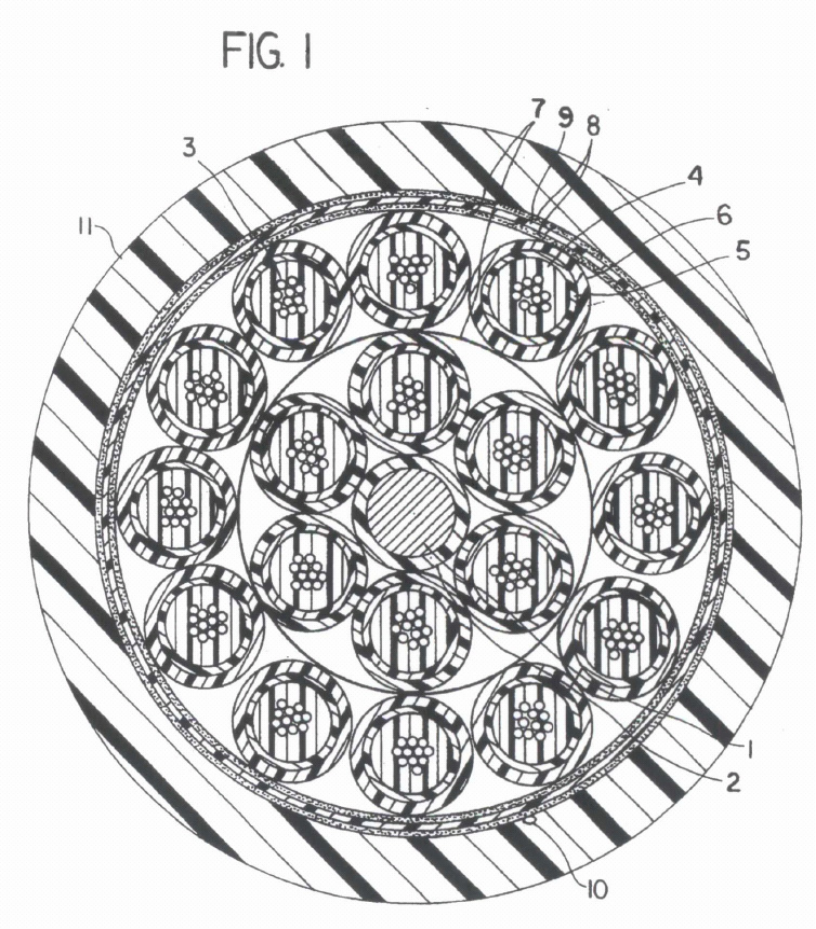

Nave Fig. 1 depicts buffer tubes

Nave Fig. 1 depicts a PVC (polyvinylchloride) tube **2** extruded over glass reinforced plastic central member **1**. In the design of Nave Fig. 1, which is said to have 216 optical fibers, the outer diameter of central member **1** is 2.05 mm and the outer diameter of PVC coating **2** is 3.2 mm. Col. 1:46-53.

Two layers of buffer tubes lay around coated central member **1**, **2**. A polyester yarn binder **7** is wound about each buffer tube layer. Each buffer tube consists of an outer layer **6** of polybutyltereph[tha]late (PBT) **6** over an inner polycarbonate layer **5**. Inside each buffer tube **5, 6** are a plurality of light waveguides **3** and filling compound **4**. Surrounding the outer layer buffer tubes is another polyester binder thread **7**. Laid over the outermost polyester binder layer **7** is a system consisting of a flame resistant polyimide tape **9** between layers **8** of aramid yarns. Tape **9** may be a polyimide. Extruded outer flame resistant jacket **11** is preferably made from a polyvinyl chloride. Col. 1:54 through col. 2:4.

With respect to Nave, the Examiner found (Examiner's Answer, pages 3-4):

> Nave teaches a fiber optic cable (Fig. 1) with a central strength member (**1**), buffer tubes with loose fibers (**3**) embedding [sic-embedded] in a soft filling (**4**) comprising a radially inward first polycarbonate (PC) layer (**5**) having an [sic—a] first known coefficient of thermal expansion (CTE) (6.8×10^{-5} mm/mm/ºC) formed into an elongate cylinder dimensioned so the fibers remain loose, a radially outward

second polybutyl terephthalate (PBT) layer (**6**) having a second known CTE (higher than the CTE of PC, 7.4 x 10^{-5} mm/mm/ºC) formed into an elongate cylinder that circumferentially overlies the inner layer (**5**) and is the outermost layer of the buffer tubes (Nave Fig. 1, column 1 lines 56-63) and an outer jacket (**11**) surrounding all the components in the cable.

The coefficients of thermal expansion appear to have come from page 3 of a Dow Design Guide of record in the application on appeal:

http://www.dow.com/styron/design/guide/thermal.htm

The Examiner found that Nave differs from claim 1 in that Nave (1) does not explicitly state that either layer is foamed and (2) that the first layer is PBT.

(2) Pearce

Pearce Fig. 1C is reproduced below.

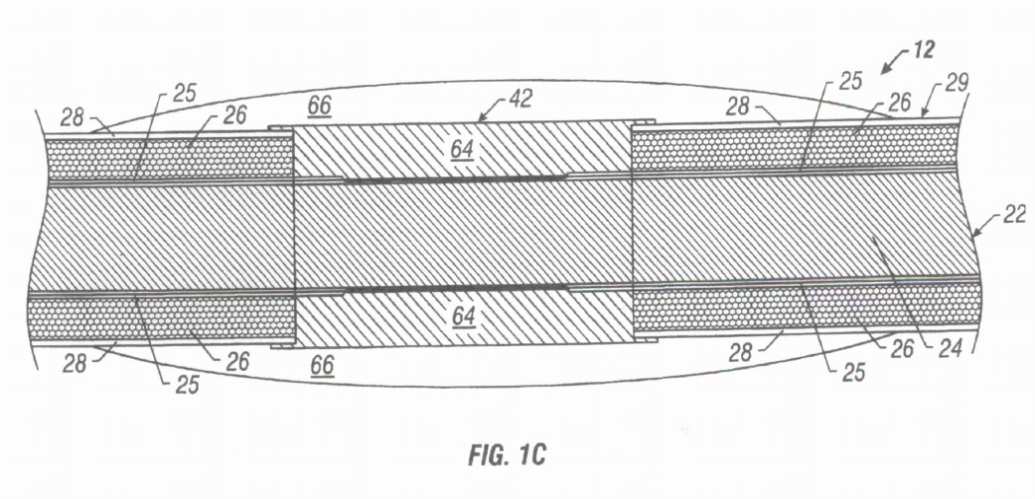

FIG. 1C

Pearce Fig. 1C depicts a section view of a cable

The Pearce invention provides a non-fluid-filled streamer cable or

towed array for performing seismic surveys in water-covered areas. Col. 3:23-25.

Pearce Figs. 1A-1C show a partial sectional view (Fig. 1A—not reproduced) and sectional views of (Figs. 1B-1C—only Fig. 1C reproduced) of the preferred manner of placing a novel hydrophone on a cable. Col. 4:40-44.

The electro-mechanical cable or the floatation cable ("cable") **12** includes a central strain member **22**. The strain member **22** is made from a material that will be able to withstand the towing or pulling forces with relatively minimal change in length when the streamer cable is towed behind a vessel. The strain member is preferably made from an aramid fiber. A wire bundle **24**, having a desired number of wires, is wrapped around the strain member **22**. The wire bundle **24** includes wires to carry power from a source (generally on the vessel) to each of the electronic circuit board, if any, in the cable **12** and wires for transporting data and signals to and from the hydrophones in the cable sections. Fiber optic cables are preferably utilized for transporting data in the cable **12**. Col. 4:45-61.

An inner protective jacket **25** is formed around the central strain member **22** and the wire bundle **24**. The inner protective jacket **25** is, preferably, extruded from a material from a group such as polyurethane, polyethylene and polycarbonate. A foam jacket **26** is extruded over the inner protective jacket **25** along the length of the cable **12** to provide the desired buoyancy. The type of the foam material and the air pockets present therein define the buoyancy for the active cable section **10**. The foam jacket

26 is encased in an outer protective jacket **28**, which is preferably extruded from a material from a group such as polyurethane, polyethylene and polycarbonate. The outer protective jacket **28** hermetically seals the cable 12 and provides a smooth outer surface **29**. Col. 4:66 though col. 5:13.

(3) Bottoms

Bottoms Fig. 4 is reproduced below.

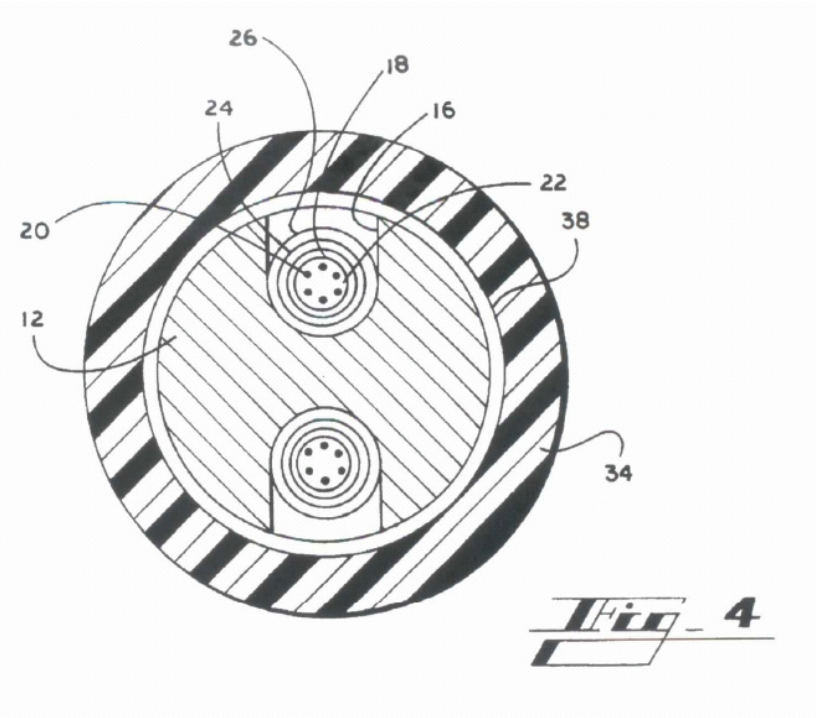

Bottoms Fig. 4 depicts a cross-section of optical wire

Bottoms Fig. 4 shows an embodiment in which an assembly is provided which has a high strength-to-weight ratio. The assembly is said to find particular applicability in drilling operations such as oil explorations where signals from or to downhole sensors must be monitored or provided. As shown in Bottoms Fig. 4, the high strength-to-weight ratio cable comprises a metal core **12** having one or more helical channels **16** in its

1 periphery. The channels **16** each contain a dielectric tube **18** which further
2 contains one or more optical fibers **20** and a flexible dielectric water-
3 blocking compound **22**. The assembly shown in Bottoms Fig. 4 comprises
4 a strength member **38** of one or more longitudinally applied or braided
5 or helically wrapped fibrous elements such as polyaramide fibers. The
6 strength member **38** is covered by an outer protective sheath **34** of an
7 extrudable thermoplastic material, such as polyethylene or polyvinyl
8 chloride, or suitably impregnated coverings of jute or similar materials.
9 The Examiner made the following findings with respect to Bottoms
10 (Examiner's Answer, page 6):
11 Bottoms teaches a fiber optical cable (Fig. 4) comprising
12 a central strength member (**12**), an outer jacket (**34**) surrounding
13 everything in the cable and two buffer tubes holding optical
14 fibers (**20**) in a loose tube configuration (column 4:52-65)
15 wherein the tubes have three layers: a first dielectric
16 fluoropolymer layer (**18**), a second polymer layer (**24**)
17 surrounding the first layer and a third polymer layer (**26**)
18 surrounding the second layer with each layer comprising a
19 different material (column 5, lines 3-35).
20 The Examiner found that Bottoms does not state explicitly that the
21 first or second layers are a foam material. *Id*.
22 (4) Taylor
23 Taylor relates to a cable having a central optical fiber.
24 Taylor Fig. 2 is reproduced below.

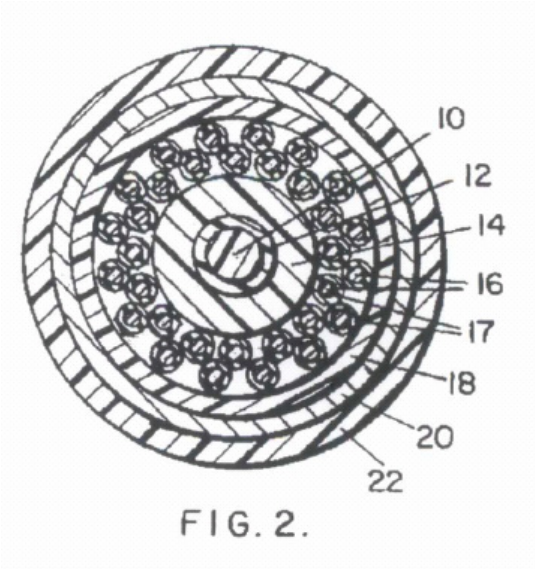

FIG. 2.

Fig. 2 depicts a transverse cross sectional view of the Taylor cable

Taylor Fig. 2 shows a optical fiber **10** surrounded by a Kelvar sleeve **12** followed by a fluoropolymer resin jacket **14**. Col. 2:37-42.

Adjacent the fluoropolymer resin jacket **14** is a coaxial conductor **16** having its own insulation, *e.g.*, a polyurethane resin or equivalent. Col. 2:43-44 and 59-63.

Element **18** is a second circumscribing layer of a fluoropolymer resin, preferably a foamed fluoropolymer. Col. 3:27-32.

Elements **20** and **22** are a ground shield and an outermost fluoropolymer insulation layer. Col. 3:34-40.

(5) Anelli

Anelli Fig. 2 is reproduced below.

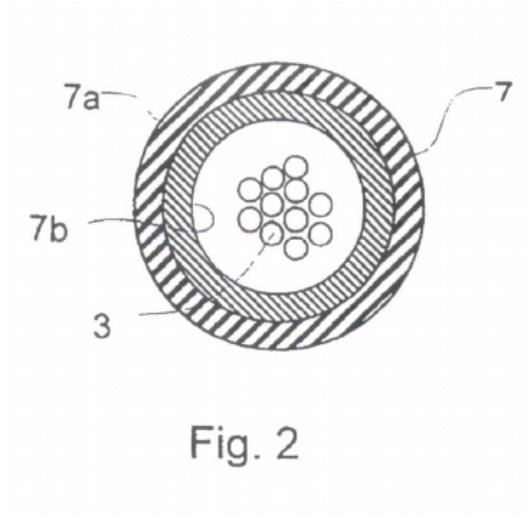

Anelli Fig. 2 depicts a tubular element

Anelli describes a buffer tube **7** having (a) an inner layer **7b** and (b) an outer layer **7a**. The outer layer is made from a conventional polymer material, such as PE, PP, PEP (ethylene-propylene copolymer) or PBT. ¶¶ 0063-0064. *See also* ¶ 0043.

(6) Witt

In addition to the prior art cited by the Examiner, we have uncovered Witt, U.S. Patent Publication 2003/0099446 A1, published 29 May 2003, now U.S. Patent 6,707,973 B2, issued 16 May 2004.

Witt U.S. Patent Publication is a statutory bar under 35 U.S.C. § 102(b).

Witt Fig. 1 is reproduced below.

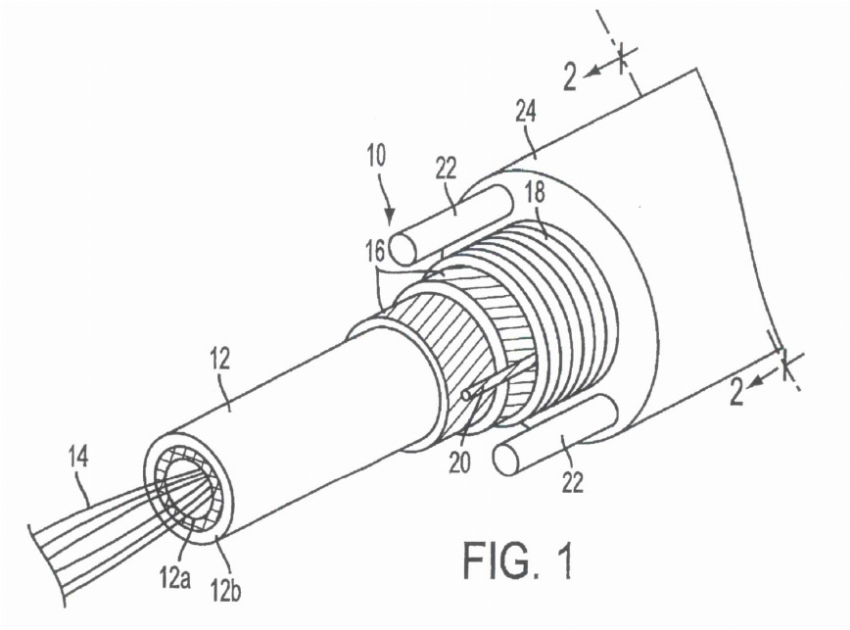

FIG. 1

Witt Fig. 1 depicts a fiber optic cable

With reference to Witt Fig. 1, there is shown a fiber optic cable **10** having a gel filed buffer tube **12** having an inner layer **12a** and an outer layer **12b**. Optical fibers **14** are disposed in the inner most portion of the buffer tube. ¶¶ 0031-0032.

Various embodiments are described in Witt.

In a preferred embodiment, dual layer extrusion is used to manufacture a dual layer buffer tube having inner and outer layers. The outer layer may be a material conventionally used for buffer tube walls, such as polybutylene terephthalate. The inner layer may be made from a material having a relatively high notch sensitivity, such as a thermoplastic elastomer or soft polyolefin that is notch-sensitive. ¶¶ 0018

The outer buffer tube wall of the dual layer embodiment may be made from any of a number of conventional materials. Materials typically used

for making buffer tubes for buffering optical fibers in a telecommunications cable include plasticized polyvinyl chloride (PVC), polybutylene terephthalate (PBT), polycarbonate (PC), polyamide such as Nylon-12, and various polyolefins. These and other suitable examples are described in detail in U.S. Patents 6,215,931, 5,574,816, and 5,911,023. ¶¶ 0019.

The inner buffer tube wall should have a higher notch-sensitivity than the outer wall. Examples of suitable materials for the inner portion include thermoplastic elastomers and flexible, or soft, polyolefins, optionally including fillers such as talc. Other fillers which may be used include, for example, organic or inorganic fillers such as calcium carbonate, carbon black, aluminum tri-hydride, magnesium hydroxide, or other fillers which may control physical properties such as coefficient of thermal expansion, modulus of elasticity, elongation to break, and flame retardancy. ¶¶ 0021.

Another embodiment of the Witt invention utilizes a foamed polymer employs a dual-layer buffer tube having a cellular inner layer **12a**, and a non-cellular outer layer **12b**. One such cellular material is cellular (foamed) impact modified, nucleated polypropylene (i.e., nucleated ethylene-propylene copolymer). ¶¶ 0024.

C. Discussion

<u>Examiner's § 103 rejections</u>

Claims 1-3 and 5-19 are on appeal.

Claims 1-3, 5-9 and 11-12 are rejected over Nave and Pearce.

Claims 10 and 13-14 are rejected over Nave, Pearce and Anelli.

Claims 1 and 15 are rejected over Bottoms and Taylor.

Claims 16-19 are rejected over Bottoms, Taylor and Anelli.

Claims 1-2, 5, 7,11-13, 15 and 18-19

In our view, the Examiner's decision to reject claims 1-2, 5, 7, 11-13 and 18-19 was correct. However, our reasons for holding the subject matter of these claims unpatentable under 35 U.S.C. § 103 differs from that of the Examiner. Our rationale is different because we, unlike the Examiner, have Witt at our disposal. In our view, claims 1-2, 5, 7, 11-13 and 18-19 are unpatentable under 35 U.S.C. § 103 over Nave, Bottoms, Anelli and Witt.

(1) Claim 1

The Examiner rejected claim 1 over Nave and Pearce.

The subject matter of claim 1 differs from Nave in that Nave does not explicitly state that its inner layer **5** is a foam.

The Examiner found that the difference was not significant because Pearce is said to describe the use of foam **25** around a strain member **22** which has a wire bundle **24** that may contain fiber optic cables (col. 4:59-61).

While the Examiner does not agree, CSP says that Pearce does not describe at least one element of claim 1, *viz.*, "a foamed layer in a buffer tube of a fiber optic cable." Appeal Brief, page 6:8.

We find it unnecessary to resolve any factual dispute between the Examiner and CSP on whether Pearce describes a foam as part of a buffer tube.

There simply can be no doubt that Witt describes a buffer tube **12** having an inner layer **12a** made of foam.

Witt differs from the subject matter of claim 1—if it differs at all—in that Witt may not describe a "center strength member."

However, Witt recognizes the need for a strength member, shown as by element **22** in Witt Fig. 1. *See also* Witt, ¶ 0032 describing element **22**.

Given that (1) Witt recognizes a desirability of a strength member, (2) Witt describes multi-buffer tube optical cables (claim 11), (3) Nave describes a center strength member and (4) CSP is using a known center strength member for its known and intended purpose, we conclude that one skilled in the art would have found it obvious to use a center strength member described by Nave in a Witt multi-buffer tube embodiment. Use of a known element for its intended purpose without any unexpected result counsels against non-obviousness. *KSR Int'l Co. v. Teleflex, Inc.*, 127 S. Ct. 1727, 1739 (2007. *See also Anderson's-Black Rock, Inc. v. Pavement Salvage Co.*, 396 U.S. 57, 59-62 (1969).

(2) Claim 2

Claim 2 reads:

> The fiber optic cable defined in Claim 1, wherein the first material has a first coefficient of thermal expansion, and the second material has a second coefficient of thermal expansion that differ[s] from the first coefficient of thermal expansion.

Witt teaches that the inner layer **7b** can be polyolefin foam and the outer buffer layer can be a conventional buffer tube polymeric material, *e.g.*, PVC, PC, Nylon, and PBT.

The coefficient of thermal expansion of polyethylene differs from that of PC, PBT and Nylon. *See* the Dow Design Guide mentioned *supra*.

The Dow Design Guide confirms what is well known to those skilled in the art, *viz.*: different materials generally have different coefficients of thermal expansion.

Since the inner and outer layers of the Witt buffer tube are made from different materials, prima facie the different materials have different coefficients of thermal expansion.

(3) Claim 5

Claim 5 reads:

> The fiber optic cable defined in Claim 1, wherein the first layer is foamed.

Witt describes a buffer tube where the first [inner] layer **12a** is foamed. Witt, ¶ 0024.

(4) Claim 7

Claim 7 reads:

> The fiber optic cable defined in Claim 1, wherein the second layer is the outermost layer of the buffer tube.

Both Nave and Witt describe buffer tubes where the second layer is the outermost layer of the buffer tube. Nave, Fig. 1, element **5** and Witt, Fig. 1, element **12b**.

(5) Claim 11

Claim 11 reads:

> The fiber optic cable defined in Claim 7, wherein the second material is selected from the group consisting of: polybutyl terephthalate; polycarbonate; and nylon.

Witt reveals that all three members of the Markush group are known materials for making an outer layer of a buffer tube. Witt, ¶ 0018. Anelli also teaches that PBT is a known material for making an outer wall of a buffer tube. Anelli, ¶ 0063.

(6) Claim 12

Claim 12 reads:

> The fiber optic cable defined in Claim 7, wherein the second material comprises polybutyl terephthalate.

As noted above, both Witt and Anelli teach the use of polybutyl terephthalate for making an outer wall of a buffer tube. See also CSP Specification, ¶ 0004.

(7) Claim 13

Claim 13 reads:

> The fiber optic cable defined in Claim 11, wherein the first material comprises a polyolefin.

Witt describes the use of polyolefin to make the inner layer. Witt, ¶ 0018.

(8) Claim 15

Claim 15 reads:

> The fiber optic cable defined in Claim 1, further comprising a third layer that circumferentially surround the second layer.

The Examiner rejected claim 15 over Bottoms and Taylor.

The Examiner found that Bottoms describes a buffer tube having three layers. Bottoms, Fig. 4, elements **18**, **24** and **26**.

CSP argues that the Bottoms device is an optical fiber ground wire which is said to be unrelated to the buffer of claim 1.

CSP does not deny, however, that the Bottoms optical fibers are surrounded by three layers.

Even if one were to accept the CSP argument, the fact remains that multiple layers of materials are used in making buffer tubes. The layers surrounding the optical fibers of Bottoms are designed *inter alia* to protect the optical fibers. Witt and Nave make it clear that two layers can be used. Bottoms suggests using three layers. Given Bottoms, we fail to see why one skilled in the art would not have found it obvious to three layers in making a buffer tube.

We are unable to find on this record that the use of a third layer produces any unexpected result. Apart from the fact that the data in Table 1 and Table 2 of the CSP specification is not explained, it does not appear to relate to a three-layer buffer tube. All three layers are being used for their intended purpose to protect the optical fibers, even though some of the layers have additional purposes for being present in the Bottoms embodiment.

The Examiner relied upon Taylor to meet the foam limitation of claim 15 (which is made a limitation of claim 15 via claim 1). CSP maintains that Taylor is irrelevant because it relates to coaxial cable. While we are not entirely sure, it may be that CSP also maintains that foamed fluoropolymer resin **18** is not part of a buffer tube given the presence of electrical insulation **17** between the foamed resin and non-foamed resin layer **16**. We find it unnecessary to resolve any factual disagreement between the Examiner and CSP with respect to Taylor.

The significant point is that Bottoms describes the use of three layers. To place a third layer circumferentially on the outer Witt layer would appear to be nothing more than using a third layer for additional protection.

(9) Claim 18

Claim 18 reads:

> The fiber optic cable defined in Claim 15, wherein the second material comprises a polyolefin.

Witt describes the use of polyolefins to make the second layer of the buffer tube. Witt ¶ 0019. So does Anelli. Anelli ¶ 0063. See also CSP Specification, ¶ 0004.

(10) Claim 19

Claim 19 reads:

> The fiber optic cable defined in Claim 15, wherein the third material is selected from the group consisting of: polybutyl terephthalate; polycarbonate; nylon; and polyolefin.

CSP concedes that polybutyl terephthalate, nylon, and polyolefin are known materials for making buffer tube layers. CSP Specification, ¶ 0004. Witt confirms the CSP concession, along with the fact that polycarbonate also is a known material for making buffer layers. Witt, ¶ 0019. See also Anelli, ¶ 0063.

Remaining claims on appeal

We do not reach the patentability of the remaining claims on appeal.

In an ex parte appeal, the Board of Patent Appeals and Interferences is primarily a review body. Nevertheless, from time to time a new and highly relevant reference is uncovered. When appropriate, based on a new reference, we may make a new ground of rejection under 37 C.F.R. § 41.50(b). With respect to those claims which are facially rejectable based on Nave, Bottoms, Anelli and Witt, we have made a new ground of rejection. With respect to the remaining claims, we believe that it is more appropriate for the Examiner in the first instance to determine the patentability of the remaining claims over the prior art, including Witt and any other prior art the Examiner finds relevant. Nothing in our opinion should be construed as limiting the action the Examiner can take upon remand.

Other CSP arguments

We have considered all the arguments made by CSP in the Appeal Brief, but find none that warrant a holding of non-obviousness with respect to claims 1-2, 5, 7, 11-12 and 18-19. *Cf. Hartman v. Nicholson*, 483 F.3d 1311, 1315 (Fed. Cir. 2007).

D. Decision

Upon consideration of the appeal, and for the reasons given herein, it is

ORDERED that the decision of the Examiner rejecting claims 1-2, 5, 7, 11-13 and 18-19 over the prior art is *affirmed*.

FURTHER ORDERED that since our obviousness rationale differs from the rationale of the Examiner and we have relied on new prior art (Witt), our affirmance is designated as a new ground of rejection. 37 CFR § 41.50(b) (2008).

FURTHER ORDERED that with respect to claims 3, 6, 8-10, and 14-17, the application is remanded to the Examiner for such further action on these claims as the Examiner deems appropriate.

FURTHER ORDERED that our decision is not a final agency action.

FURTHER ORDERED that within **two (2) months** from the date of our decision, CSP may further prosecute the application on appeal by exercise one of the two following options:

1. Request that prosecution be reopened by submitting an amendment or evidence or both. 37 CFR § 41.50(b)(1) (2006).

2. Request rehearing on the record presently before the Board. 37 CFR § 41.50(b)(2) (2006).

FURTHER ORDERED that no time period for taking any subsequent action in connection with this appeal may be extended under 37 C.F.R. § 1.136(a)(1)(iv) (2008).

AFFIRMED-IN PART and REMANDED-IN-PART

rvb

cc (via First Class mail)

JAMES R. CANNON
MYERS BIGEL SIBLEY & SAJOVEC, P.A.
P.O. BOX 37428
RALEIGH NC 27627