UNITED STATES PATENT AND TRADEMARK OFFICE

BEFORE THE BOARD OF PATENT APPEALS
AND INTERFERENCES

Ex parte CHARLES W. FRIEDLI, DUE Q. HUYNH,
WILLIAM B. KIGER and KEVIN K. MAGGERT

Appeal 2008-6285
Application 10/677,922
Technology Center 2800

Decided: October 31, 2008

Before JAMESON LEE, SALLY C. MEDLEY, and JAMES T. MOORE, *Administrative Patent Judges*.

MEDLEY, *Administrative Patent Judge*.

DECISION ON APPEAL

A. Statement of the Case

Motorola Inc. ("Motorola"), the real party in interest, seeks review under 35 U.S.C. § 134(a) of a Final Rejection of claims 1-5 and 7-14. We have jurisdiction under 35 U.S.C. § 6(b). We affirm.

Motorola's invention is related to a latch for a battery pack. The battery pack has a planar member, a spring retention post and at least one insertion snap coupled to the planar member. At least one barbed wing member is also coupled to the planar member. The barbed wing member(s) supports a

pair of barbs that extend perpendicularly from the barbed wing member. Spec. Abs., 3-6.

Representative claim 1, reproduced from the Claim Appendix of the Appeal Brief, reads as follows:

> A latch for a rechargeable battery pack, comprising:
> a. a planar member configured for insertion to the rechargeable battery pack in a first linear direction;
> b. at least one spring retention post coupled to the planar member configured to receive a spring force of the rechargeable battery pack directed in a second linear direction opposite the first linear direction;
> c. at least one insertion snap coupled to the planar member configured to resist the spring force and maintain the planar member at a particular position relative to the rechargeable battery pack until released therefrom; and
> d. at least one barbed wing member coupled to the planar member, extending distally outward from the planar member, wherein the at least one barbed wing member supports a pair of barbs extending perpendicularly from the at least one barbed wing member.

The Examiner relies on the following prior art in rejecting the claims on appeal:

Ferrell et al. (“Ferrell”)	4,213,078	Jul. 15, 1980
David, Jr. (“David”)	4,728,157	Mar. 1, 1988
Sharrah et al. (“Sharrah”)	6,663,152	Oct. 14, 2003

The Examiner rejected claims 1-5, 9 and 12-14 under 35 U.S.C. § 102(b) as anticipated by Ferrell.

The Examiner rejected claims 1-5 and 7 under 35 U.S.C. § 102(b) as anticipated by Sharrah.

The Examiner rejected claim 8 under 35 U.S.C. § 103(a) as unpatentable over Sharrah and Ferrell.

The Examiner rejected claims 10 and 11 under 35 U.S.C. § 103(a) as unpatentable over Ferrell and David.

B. Principles of Law

"In the patentability context, claims are to be given their broadest reasonable interpretations. Moreover, limitations are not to be read into the claims from the specification." *In re Van Geuns,* 988 F.2d 1181, 1184 (Fed. Cir. 1993) (citation omitted).

C. Analysis

<u>Rejection of claims 1-5, 9 and 12-14 as anticipated by Ferrell</u>

Claims 1-5, 9 and 12-14 stand or fall together. Br. 4-5. Representative claim 1 is independent and recites "the at least one barbed wing member supports a pair of barbs extending perpendicularly from the at least one barbed wing member." Br. 8.

The Examiner and Motorola disagree as to whether Ferrell describes a pair of barbs that extend perpendicularly from a barbed wing member. Br. 4; Final Rejection 2-3; Ans. 3-4, 10-11. Motorola argues that Ferrell's barbs are collinear to the barbed wing member. Br. 4.

The language of claim 1 does not specify the surface of the barbed wing member from which the pair of barbs must extend perpendicularly. For example, the claim language does not require the pair of barbs to extend perpendicularly from a surface defined by a major axis of the barbed wing member. In order to meet the claim limitations, it is sufficient for the pair of barbs to extend perpendicularly from *any* surface of the barbed wing member.

As depicted in figure 1 below, [numbers from **figure 1** inserted], Ferrell describes battery cover [**30**] that includes a backup spring [**30-3**]. Ferrell

describes a pair of projections (i.e., pair of barbs) that extend perpendicularly from the side surface of backup spring main body [**30-3**] (i.e., barbed wing member), where the side surface is represented by the thickness of the backup spring main body. Therefore, we find that Ferrell meets the claim limitations.

Figure 1, reproduced from Ferrell's figure 12, is below:

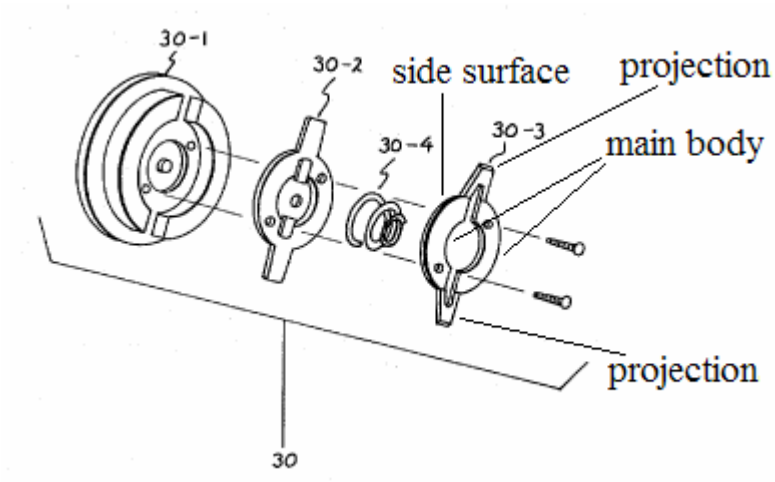

Figure 1 depicts an exploded view of Ferrell's battery closure plate or cover.

For all these reasons we find that Motorola has not sustained its burden of showing that the Examiner erred in rejecting claims 1-5, 9 and 12-14 as anticipated by Ferrell.

<u>Rejection of claims 10 and 11 as unpatentable over Ferrell and David</u>

Claims 10 and 11 are dependent on claim 9. Br. 10. Motorola argues that claims 10 and 11 are patentable for the same reasons articulated with respect to claims 1-5, 9 and 12-14. Br. 6. For the same reasons explained above with respect to claims 1-5, 9 and 12-14, we find that Motorola has not sustained its burden of showing that the Examiner erred in rejecting claims 10 and 11 as unpatentable over Ferrell and David.

Rejection of claims 1-5 and 7 as anticipated by Sharrah

Claims 1-5 and 7 stand or fall together. Br. 5-6. In addition to reciting at least one barbed wing member with a pair of perpendicularly extending barbs, independent claim 1 further recites "a planar member configured for insertion to the rechargeable battery pack in a first linear direction . . . at least one insertion snap coupled to the planar member configured to resist the spring force and maintain the planar member at a particular position relative to the rechargeable battery pack until released therefrom . . .". Br. 8.

Motorola argues that Sharrah's configuration asserted by the Examiner to meet the claim limitations leaves no remaining parts that correspond to the planar member or the insertion snap. Br. 5. We understand Motorola to argue that the claim limitations require the planar member, insertion snap, barbed wing member and barbs to be distinct structural and functional parts with no overlap of structure or function.

We do not agree with Motorola's argument. The limitations of claim 1 do not require the planar member, insertion snap, barbed wing member and barbs to be distinct non-overlapping structural and functional parts. Claim 1 only requires the various elements to be "coupled to" one another. We broadly interpret "coupled to" as meaning connected to or joined to. Claim 1 requires the insertion snap and barbed wing member to be *coupled to* the planar member. Br. 8. Claim 1 requires the insertion snap to be *coupled to* the planar member and the barb to be *coupled to* the barbed wing member which is *coupled to* the planar member. According to the claim language, it is possible for the insertion snap and the barb to be the same structure because the insertion snap/barb could be coupled to the planar member via the barb wing member.

As shown in figure 3 below, [numbers from **figure 3** inserted], the Examiner finds Sharrah's latch member [**80**] corresponds to the barbed wing member (shown as shaded) and also to the planar member located on the upper end of latch member [**81**]. Final Rejection 6; Ans. 6-7, 12-13. The Examiner further finds Sharrah's pivot [**83**] and engaging projection [**82**] to correspond to the claimed insertion snap. Final Rejection 6; Ans. 6-7, 12-13. The Examiner still further finds Sharrah's engaging projection [**82**] and the circled upper portion of latch [**80**] located near spring [**84**] to correspond to the pair of barbs. Final Rejection 6; Ans. 6-7, 12-13.

Figure 3, reproduced from Sharrah's figure 9, is below:

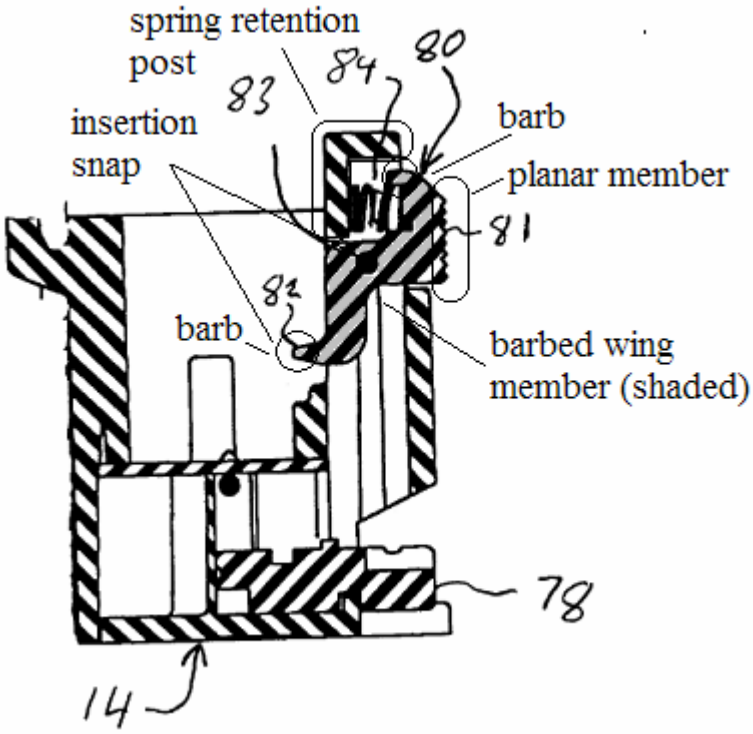

Figure 3 depicts a battery charger with a battery latch.

Although the barbed wing member (shown as shaded) and the planar member [**81**] appear to be a unitary structure, nonetheless the barbed wing member is joined to or connected to the planar member. Although the

insertion snap [**82**],[**83**] is not directly coupled to the planar member [**81**], it is connected to or joined to the planar member via the barbed wing member (shown as shaded). The claim limitations do not require a direct coupling or direct connection. Therefore, we find that Sharrah meets the limitations of claim 1.

Motorola also argues that Sharrah's upper end [**81**] of latch member [**80**] asserted by the Examiner to correspond to the planar member does not move linearly. Br. 5. Motorola's argument is not commensurate in scope with the claim limitations. Claim 1 one requires "a planar member configured for insertion to the rechargeable battery pack in a first linear direction . . .". During assembly of Sharrah's latch, prior to attaching pivot [**83**] and spring [**84**], the planar member [**81**] is capable of being inserted to the battery pack in a first linear direction and therefore it is configured for insertion to the battery pack in a first linear direction.

For all these reasons we find that Philips has not sustained its burden of showing that the Examiner erred in rejecting claims 1-5 and 7 as anticipated by Sharrah.

<u>Rejection of claim 8 over Sharrah and Ferrell</u>

Claim 8 is dependent on claim 7. Br. 9. Claims 8 stands or falls with claims 1-5 and 7 since Motorola does not argue the limitations of claim 8 separately. Br. 6. For the same reasons explained above with respect to claims 1-5 and 7, we find that Motorola has not sustained its burden of showing that the Examiner erred in rejecting claim 8 as unpatentable over Sharrah and Ferrell.

D. Decision

Upon consideration of the appeal, and for the reasons given herein, it is

ORDERED that the decision of the Examiner rejecting claims 1-5, 9 and 12-14 under 35 U.S.C. § 102(b) as anticipated by Ferrell is affirmed.

ORDERED that the decision of the Examiner rejecting claims 1-5 and 7 under 35 U.S.C. § 102(b) as anticipated by Sharrah is affirmed.

ORDERED that the decision of the Examiner rejecting claim 8 under 35 U.S.C. § 103(a) as unpatentable over Sharrah and Ferrell is affirmed.

ORDERED that the decision of the Examiner rejecting claims 10 and 11 under 35 U.S.C. § 103(a) as unpatentable over Ferrell and David is affirmed.

No time period for taking any subsequent action in connection with this appeal may be extended under 37 C.F.R. § 1.136(a).

AFFIRMED

ack

cc:

MOTOROLA INC
600 NORTH US HIGHWAY 45
W4 - 39Q
LIBERTYVILLE IL 60048-5343