The opinion in support of the decision being
entered today is not binding precedent of the Board

Paper No. 139

Filed by: Interference Merits Panel
Mail Stop Box Interference
P.O. Box 1450
Alexandria, VA 22313-1450
Tel.: 703-308-9797
Fax: 703-305-0942

UNITED STATES PATENT AND TRADEMARK OFFICE

BEFORE THE BOARD OF PATENT APPEALS
AND INTERFERENCES

JIAN BAI, STEVEN FISCHER,
and J. MICHAEL FLANAGAN,
Junior Party,[1]

v.

VICTOR V. LAIKO and ALMA L. BURLINGAME,
Senior Party.[2]

Patent Interference No. 104,745

DECISION ON PRIORITY

Before MARTIN, LEE, and MEDLEY, Administrative Patent Judges.

MARTIN, Administrative Patent Judge

For the following reasons, judgment on the issue of priority is being entered in favor of

---

[1] Application 09/146,817, filed September 4, 1998. PTO records show an assignment to Agilent Technologies Inc. ("Agilent"), identified as the real party in interest at page 5 of Bai et al.'s opening brief. Bai et al. have been accorded the benefit as to Count 1 (the sole count) of Provisional Application 60/089,088, filed June 12, 1998.

[2] Patent 5,965,884, issued October 12, 1999, based on Application 09/646,910, filed June 4, 1998. PTO records show an assignment to The Regents of the University of California, identified as the real party in interest at page 1 of Laiko et al.'s opening brief. Laiko et al. have not been accorded the benefit as to Count 1 of any earlier application or patent.

junior party Bai et al.

Procedural background

The relevant procedural background is as follows. This interference was declared on 31 August 2001 with a single count (Count 1) that is the alternative union of Laiko et al.'s ("Laiko's") patent claim 1 and Bai et al.'s ("Bai's") application claim 41.[3] The claims designated as corresponding to the count when the interference was declared consisted of Laiko's claims 1-9 (all of the patent claims) and Bai's claims 34-41 (all of the pending application claims).

Laiko filed the following motions under 37 CFR §§ 1.633 and 1.634:

(a) Laiko's Motion 1 under § 1.634 to correct inventorship by removing Dr. Burlingame as a named inventor in the involved patent, which would leave Dr. Laiko as the sole named inventor;

(b) Laiko's Preliminary Motions 2 and 3 under § 1.633(c)(4) to designate Laiko's claims 4 and 6, respectively, as not corresponding to the count; and

(c) Laiko's Preliminary Motion 4 under § 1.633(a) motion alleging that Bai's claim 41 is unpatentable for anticipation by Hillenkamp U.S. Patent 5,118,937 (BX 2075[4]).

Also, Bai filed a paper[5] stating an intent to file a 37 CFR § 1.633(a) motion alleging that Laiko's involved claims are unpatentable under 35 U.S.C. § 102(f) on the ground of third party

---

[3] Interference File, Paper No. 1.

[4] BX and LX refer to the Bai and Laiko exhibits.

[5] Paper No. 16.

derivation, namely, Laiko's derivation of the invention from Dr. Brian Chait, who is not a party to this interference.

In an order dated 14 March 2002,[6] the Administrative Patent Judge (APJ) postponed until the priority phase the filing of (1) an opposition and reply to Laiko's Motion 1 under § 1.634 to correct inventorship and (2) Bai's proposed motion under § 1.633(a) alleging unpatentability on the ground of third party derivation.

On 23 September 2002, following a 5 September 2002 oral argument, a Trial Section Merits Panel issued an order requiring the parties to show cause why judgment should not be entered against Laiko's claim 1 and Bai's claim 41, which are the bases for the two count alternatives, on the ground of unpatentability over Hillenkamp.

On 24 February 2004, a Trial Section Merits Panel issued a "Decision on Order To Show Cause and Preliminary Motions"[7] (hereinafter "Motions Decision"), adhered to on reconsideration,[8] holding that both parties had demonstrated the patentability of their respective claims over Hillenkamp and also granting Laiko's Preliminary Motions 2 and 3 under § 1.633(c)(4) to designate Laiko's claims 4 and 6 as not corresponding to the count.

---

[6] Paper No. 54.

[7] Paper No. 89.

[8] Paper No. 93.

Concurrently with that paper, the APJ issued a paper redeclaring the interference to designate Bai's claims 34-41 and only Laiko's claims 1-3, 5, and 7-9 as corresponding to the count.[9]

Following redeclaration, both parties took testimony on priority.[10] Each party submitted an opening brief in support of its case-in-chief, a brief in opposition to the opponent's case-in-chief, and a reply brief.[11]

Bai's opening brief explains that "Bai is no longer pursuing the allegation that Laiko derived the invention from a third party" and that "Bai no longer challenges Laiko's motion to change inventorship by deleting Dr. Alma Burlingame as an inventor." BBr 3, ¶ 9. Accordingly, Laiko's Motion 1 to correct inventorship by deleting Dr. Burlingame as an inventor is hereby granted. The interference is being redeclared accordingly in a separate paper mailed herewith. The caption of the "JUDGMENT UNDER RULE 658," also mailed herewith as a separate paper, reflects that change.

Laiko has filed a motion[12] to suppress a so-called "rebuttal" declaration by Dr. John Fenn (BX 2117) on the ground that it is not proper rebuttal evidence.

Both parties were represented by counsel at the 16 December 2003 oral hearing.

---

[9] Paper No. 90.

[10] The testimony of Bai's witnesses is included in Bai's exhibits. The testimony of Laiko's witnesses constitutes Laiko's record ("LR").

[11] Bai's opening brief, Laiko's opposition brief, and Bai's reply brief are hereinafter identified as "BBr," "LOppBr," and "BRBr." Laiko's opening brief, Bai's opposition brief, and Laiko's reply brief are hereinafter identified as "LBr," "BOppBr," and "LRBr."

[12] Paper No. 115.

The invention and the prior art

The subject matter of the interference relates to mass spectrometers and more particularly to mass spectrometers of the MALDI (Matrix Assisted Laser Desorption Ionization) type. In prior-art MALDI spectrometers, the sample, which includes a matrix material and an analyte material, is located in a vacuum region, where it is irradiated by the laser. Such an arrangement is shown, for example, in Figure 1 of the aforementioned Hillenkamp patent (BX 2075), wherein the target material 10 is contained within the vacuum chamber of ion source 11, which is connected to vacuum chamber 19 of the analyzer:

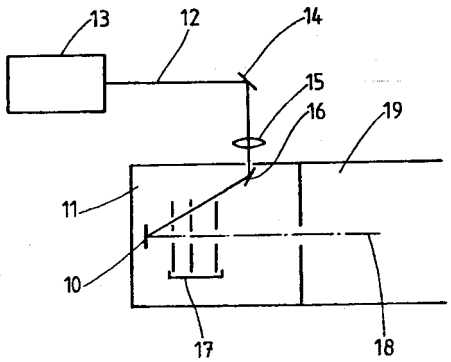

Fig. 1

Bai's specification, in describing a prior-art MALDI apparatus in which the target consists of co-precipitate of a matrix and an analyte, explains that the laser pulse

> induc[es] the accumulation of a large amount of energy in the co-precipitate through electronic excitation or molecular vibrations of the matrix molecules. The matrix dissipates the energy by desorption, carrying along the analyte into the gaseous phase. During this desorption process, ions are formed by charge transfer between the photoexcited matrix and the analyte.

Bai Specification, p. 2, ll. 14-19. Bai's specification further explains that various types of mass analyzers are typically used to detect the analyte ions generated using MALDI:

> The most common type of mass analyzer used with MALDI is the time-of-flight (hereinafter referred to as "TOF") analyzer. However, other mass analyzers, such as ion trap, ion cyclotron resonance mass spectrometers and quadrupole time-of-flight (QTOF) may be used. These mass analyzers must operate under high vacuum, generally less than 1 x 10^{-5} torr. Accordingly, conventional MALDI sources have been operated under high vacuum.

Id. at 2, ll. 20-24.

Some prior-art, nonMALDI mass spectrometers employed ESI (electrospray ionization) to generate analyte ions at atmospheric pressure. After being generated at atmospheric pressure, the analyte ions enter the vacuum region of a mass analyzer through an orifice, as shown for example in Figure 1 of Fenn U.S. Patent 5,130,538 (BX 2033):

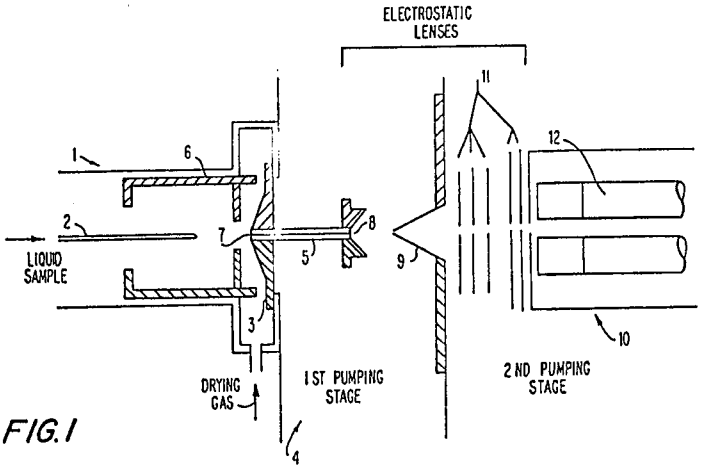

FIG. 1

A solution containing the analyte material enters the ES (electrospray) chamber 1 through a stainless steel hypodermic needle 2 maintained at a few kilovolts relative to the walls and end-plate 3 (col. 9, ll. 31-35). The aperture leading into the vacuum system 4 can be in the form of a simple orifice or nozzle or, as shown in the figure, a capillary 5 of dielectric material (id. at ll. 53-61).

The respective advantages of the prior-art MALDI and ESI systems are described as follows in Laiko's involved patent specification:

> The advantages of MALDI include simplicity of probe preparation, stability and high tolerance to sample contamination. One of the major advantages of ESI is the atmospheric pressure character of ionization (external with respect to a mass spectrometer), which enables a direct on-line interface with other analytical separation techniques, such as HPLC, CZE, and IMS. An Atmospheric Pressure Interface (API) is used to transfer ions from an atmospheric pressure ion source, such as an ESI, to a vacuum of a mass spectrometer.

Laiko Specification, col. 1, ll. 57-67. The invention at issue in this interference obtains the advantages of both of these techniques by using MALDI to generate analyte ions at atmospheric pressure, referred to as AP-MALDI.

Laiko's Figure 1 (described at col. 4, l. 26 to col. 5, l. 2) shows one of Laiko's disclosed embodiments of an AP-MALDI apparatus 10:

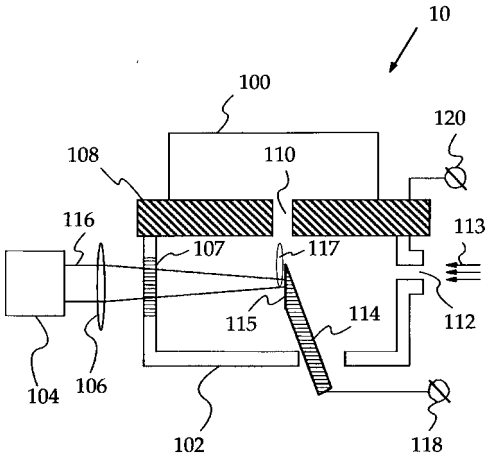

The spectrometer 100 has an interface 108 which defines an inlet orifice 110. A sample support 114 having a target surface 115 is enclosed in an atmospheric-pressure ionization chamber 102. The sample on the target surface is irradiated through a window 107 by laser energy emitted by laser 104 and focused by lens 106. A gas inlet 112 admits a bath gas or gas mixture 113 into the ionization chamber through gas inlet 112.

The count

Count 1, the sole count, is the alternative union of two parts which are identical to Laiko's patent claim 1 and Bai's application claim 41, respectively, and are referred to hereinafter as the Laiko and Bai count alternatives:[13]

> [Laiko's claim 1] An atmospheric-pressure ionization device for connection to a spectrometer, comprising:
> a) an atmospheric-pressure ionization chamber;
> b) a sample support positioned within said ionization chamber;

[13] As correctly noted by Laiko (LOppBr 7, ¶¶ 4-5), paragraph d of Bai's claim 41 is inaccurately reproduced at page 9 of Bai's opening brief, erroneously reciting "releases" instead of "released" and omitting "said analyte" from the phrase "a passageway . . . for transporting said analyte ions to said spectrometer." Nothing in the record before us suggests these errors were anything other than inadvertent. Furthermore, Bai's discussions of how the priority evidence shows a conception and actual reductions to practice of the recited AP-MALDI explain that the passageway transports <u>analyte</u> ions to the spectrometer. For example, Bai's opening brief states: "Encouraged by these December 19, 1997 test results, Bai intended to proceed with its second goal, i.e., to establish that its AP-MALDI device could generate analyte ions and transport those ions to a mass spectrometer." BBr 72.

c) a sample placed on said sample support, and comprising an analyte embedded in an ionization-assisting matrix chosen such that said matrix facilitates ionization of said analyte to form analyte ions upon light-induced release of said analyte from said sample;

c) [sic] a laser for illuminating said sample, to induce said release of said analyte from said sample, and to induce ionization of said analyte to form said analyte ions; and

d) [sic] an interface connecting said ionization chamber and said spectrometer for capturing said analyte ions released from said sample and for transporting said analyte ions to said spectrometer,

or

[Bai's claim 41] An atmospheric-pressure ionization apparatus for connection to a spectrometer, comprising:

a) a surface for depositing a sample;

b) a sample placed on said surface, and comprising an analyte and matrix mixture, wherein said matrix is capable, upon absorption of laser light, of transferring charge to the analyte to form analyte ions;

c) a laser to induce desorption and ionization of said analyte to form said analyte ions; and

d) a passageway for capturing said analyte ions released from said analyte/matrix mixture and for transporting said analyte ions to said spectrometer.

The scope and meaning of the Bai count alternative

The parties disagree regarding the scope and meaning of two terms used in the Bai count alternative: (a) "atmospheric-pressure," which appears only in the preamble; and (b) "spectrometer," which appears in the preamble and the body. Laiko argues that construing these terms in light of Bai's disclosure reveals that the term "atmospheric-pressure" implies the presence of an ionization chamber and that the term "spectrometer" is limited to a mass spectrometer which produces a mass spectrum. Bai argues that the count language is unambiguous and therefore must be construed without consulting Bai's disclosure, citing DeGeorge v. Bernier, 768 F.2d 1318, 1321-22, 226 USPQ 758, 761 (Fed. Cir. 1985); Fontijn v. Okamoto, 518 F.2d 610, 617, 186 USPQ 97, 102-03 (CCPA 1975); and Lamont v. Berguer,

7 USPQ2d 1580, 1582 (Bd. Pat. App. Int. 1988). BBr 100. Laiko responds that the Bai count alternative should be construed in light of Bai's application because: (1) the Trial Section Merits Panel, when deciding Laiko's Preliminary Motion 4 seeking judgment against Bai's claim 41 (the basis for the Bai count alternative) for unpatentability over the Hillenkamp patent, construed the term "atmospheric-pressure" in light of Bai's specification; (2) Bai's opposition to Laiko's Preliminary Motion 4 argued that claim 41 should be construed in light of Bai's disclosure; and (3) Bai has not shown "that Bai's claim 41 is so unambiguous as to obviate any need for clarification," instead relying on attorney argument. LOppBr 29. As explained below, the terms at issue have the same meanings whether or not they are construed in light of Bai's specification.

Because both of the terms at issue appear in the preamble of the Bai count alternative, it is necessary to consider whether and to what extent the preamble is entitled to weight. Griffin v. Bertina, 285 F.3d 1029, 1033, 62 USPQ2d 1431, 1434 (Fed. Cir. 2002) held:

> We conclude that the Board did not err in construing the count to be limited by the preamble. A preamble to a claim "has the import that the claim as a whole suggests for it." Bell Communications Research, Inc. v. Vitalink Communications Corp., 55 F.3d 615, 620, 34 USPQ2d 1816, 1820 (Fed. Cir. 1995). . . . Diagnosis is . . . the essence of this invention; its appearance in the count gives "life and meaning" to the manipulative steps. See Kropa v. Robie, 38 C.C.P.A. 858, 187 F.2d 150, 152, 88 USPQ 478, 481 (CCPA 1951) (stating that a preamble is limiting when it is "necessary to give life, meaning and vitality to the claims or counts").

Accord, Manning v. Paradis, 296 F.3d 1098, 1103, 63 USPQ2d 1681, 1684 (Fed. Cir. 2002)("we have recently held, also in the context of an interference dispute, that '[a] preamble to a claim has the import that the claim as a whole suggests for it.' Griffin v. Bertina, 285 F.3d 1029, 1033, 62 USPQ2d 1431, 1434 (Fed. Cir. 2002) (internal citation omitted)."). See also Allen

Engineering Corp. v. Bartell Industries Inc., 299 F.3d 1336, 1346, 63 USPQ2d 1769, 1774 (Fed. Cir. 2002):

> Generally, the preamble does not limit the claims. DeGeorge v. Bernier, 768 F.2d 1318, 1322 n.3, 226 USPQ 758, 764 n.3 (Fed. Cir. 1985). However, the preamble may be limiting "when the claim drafter chooses to use both the preamble and the body to define the subject matter of the claimed invention." Bell Communications Research, Inc. v. Vitalink Communications Corp., 55 F.3d 615, 620, 34 USPQ2d 1816, 1820(Fed. Cir. 1995). If the preamble is "necessary to give life, meaning and vitality" to the claim, then the claim preamble should be construed as limiting. Kropa v. Robie, 38 C.C.P.A. 858, 187 F.2d 150, 152, 88 USPQ 478, 480-81 (CCPA 1951). This is determined "on the facts of each case in view of the claimed invention as a whole." In re Stencel, 828 F.2d 751, 754, 4 USPQ2d 1071, 1073 (Fed. Cir. 1987); see also Applied Materials, Inc. v. Advanced Semiconductor Materials Am., Inc., 98 F.3d 1563, 1572-73, 40 USPQ2d 1481, 1488 (Fed. Cir. 1996) ("Whether a preamble stating the purpose and context of the invention constitutes a limitation ... is determined on the facts of each case in light of the overall form of the claim, and the invention as described in the specification and illuminated in the prosecution history.").

(1) The recited "spectrometer"

It is evident from the language of both the preamble ("An atmospheric-pressure ionization apparatus for connection to a spectrometer, comprising:") and paragraph d of the Bai count alternative ("a passageway for capturing said analyte ions released from said analyte/matrix mixture and for transporting said analyte ions to said spectrometer") that the spectrometer is not a structural element of the Bai count alternative, which instead merely requires that the recited ionization apparatus be capable of forming an operative connection to a

spectrometer by generating analyte ions and transporting them to the spectrometer via the recited passageway. The term "spectrometer" therefore is entitled to weight only to that extent.

As for the meaning of "spectrometer," whether we interpret the Bai count alternative by looking to Bai's specification or not makes no difference to the outcome, as explained below. The fact that paragraph d recites a passageway for transporting analyte ions to the spectrometer makes it clear that the recited "spectrometer" is a mass spectrometer rather than an optical spectrometer, which is the type of spectrometer described in the definition of "spectrometer" quoted by Laiko from Webster's College Dictionary (1991). LOppBr. 30.[14] "Mass spectrometry" is defined as follows in Gessner G. Hawley, The Condensed Chemical Dictionary 545-46 (8th ed, 1971):[15]

> A method of chemical analysis in which ions are passed in a vacuum first through an accelerating electric field and then through a strong magnetic field. This has the effect of separating the ions according to their mass, as they traverse the magnetic field at different velocities (electromagnetic separation). Because of their greater kinetic energy, the heavier ions describe a wider arc than the lighter ones. The ions are collected in appropriate devices and are identified on the basis of their mass.

See Manning, 296 F.3d at 1103, 63 USPQ2d at 1685 (consulting a dictionary to establish the plain meaning of "treat" in the count preamble). The foregoing definition of "mass spectrometry" does not require or imply the step of producing a "mass spectrum," as argued by Laiko. An example of a mass spectrum, which is defined as a "[PHYS] A display, record, or plot of the distribution in mass, or in mass-to-charge ratio, of ionized atoms, molecules, or molecular

---

[14] That definition reads "n. an optical device for measuring wavelengths, deviation of refracted rays, and angles between the faces of a prism, est. [sic, esp.] an instrument consisting of a slit through which light passes, a collimator, prism that deviates the light, and a telescope through which the deviated light is viewed and examined."

[15] Copies of this and other definitions cited for the first time in this opinion are enclosed.

fragments," McGraw-Hill Dictionary of Scientific and Technical Terms 1218 (5th ed., 1994) (hereinafter "McGraw-Hill Dictionary"), appears in Bai's Figure 3A (reproduced below), which is described as showing the mass spectrum of the matrix material α-cyano-4-hydroxycinnamic acid as measured over the range of mass-to-charge ratios (m/z) from 188 through 192. Bai Specification at 9, ll.13-15.

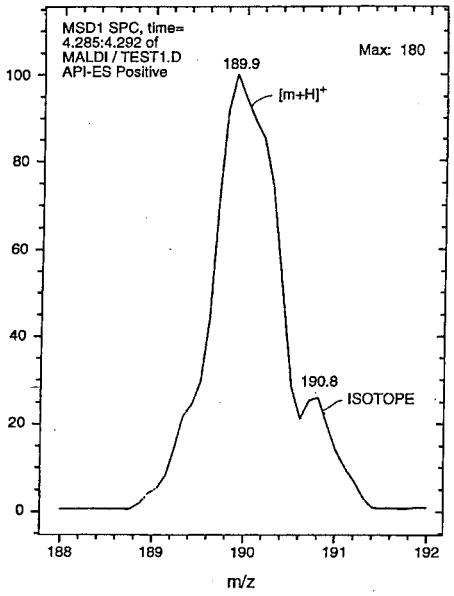

FIG._3A

Even if we look to Bai's specification to determine the meaning of "spectrometer," that fails to support Laiko's contention that the recited "spectrometer" is limited to "mass spectrometers that produce mass spectra." LOppBr 32, ll. 6-10. Specifically, Laiko cites page 1, lines 19-27, of Bai's specification, which explain that a "mass spectrometer generally contains . .

. (5) a data processing system that produces a mass spectrum of the analyte." LOppBr. 31. The presence of the term "generally" makes it clear that this statement is not being offered as a definition." It is evident from the count language, the relevant dictionary definition, and Bai's specification that the recited "spectrometer" is not limited to a mass spectrometer that produces a mass spectrum. Under these circumstances, it would be inappropriate to consider the parties' extrinsic evidence in the form of expert testimony on this interpretation issue. Cf. Vitronics Corp. v. Conceptronic, Inc., 90 F.3d 1576, 1582, 39 USPQ2d 1573, 1576 (Fed. Cir. 1996) ("In most situations, an analysis of the intrinsic evidence alone will resolve any ambiguity in a disputed claim term. In such circumstances, it is improper to rely on extrinsic evidence.").

The question of whether production of a mass spectrum nevertheless was necessary to prove that the atmospheric-pressure ionization device was satisfactory for its intended purpose is addressed infra in the discussion of Bai's alleged 23 December 1997 actual reduction to practice.

(2) The "atmospheric-pressure" limitation

The fact that the term "atmospheric-pressure" appears in the Bai count alternative only in its preamble makes it necessary to consult the specification to determine whether that term is entitled to weight. See Applied Materials, 98 F.3d at 1572-73, 40 USPQ2d at 1488 ("Whether a preamble stating the purpose and context of the invention constitutes a limitation ... is determined on the facts of each case in light of the overall form of the claim, and the invention as described in the specification and illuminated in the prosecution history.") It is readily apparent from Bai's specification that the essence of the invention is to use MALDI, which in the prior art was limited to generating analyte ions in vacuum regions, to instead generate analyte ions in

regions of atmospheric pressure. See, e.g., Bai Specification at 1, ll. 13-15 ("The invention relates to the field of mass spectrometry, and more particularly, to a matrix-assisted laser desorption ionization (MALDI) source for mass spectrometry at about atmospheric pressure."). Consequently, we hold

that the term "atmospheric-pressure" is entitled to weight and that the Bai count alternative therefore is limited to an apparatus for generating analyte ions in a region of atmospheric pressure.[16]

Turning now to the meaning of "atmospheric-pressure," the term "atmospheric pressure" is defined as "[t]he pressure at any point in an atmosphere due solely to the weight of the atmospheric gases above the point concerned." McGraw-Hill Dictionary 147. The term is also used to refer to "an exerted pressure of 1 atmosphere," which is a unit of pressure equal to 1.01325×10^5 newtons per square meter. The American Heritage Dictionary of the English Language 83 (New College Edition, 1975). These standard definitions do not imply that the atmospheric-pressure region is defined by or located within an enclosure. Nor does Laiko so contend. Instead, Laiko cites Bai's specification in support of this conclusion. However,

---

[16] This interpretation of the preamble of the Bai count alternative accordingly is consistent with the construction of the preamble of Bai claim 41 in the Motions Decision, at 8-9:

> The determination of whether preamble recitations are positive limitations "can be resolved only on review of the entirety of the patent to gain an understanding of what the inventors actually invented and intended to encompass by the claim." Corning Glass Works v. Sumitomo Elec. U.S.A., Inc., 868 F.2d 1251, 1257, 9 USPQ2d 1962, 1966 (Fed. Cir. 1989). Accordingly, we look to Bai's specification in order to properly interpret Bai claim 41.
>
> . . .Thus, Bai claim 41, when interpreted in light of the Bai specification, positively recites an apparatus capable of atmospheric-pressure ionization.

interpreting the Bai count alternative in light of Bai's specification does not support Laiko's argument. Specifically, Laiko relies on the fact that Bai's specification defines "atmospheric pressure" as a subset of "ambient pressure,"[17] the definition of which refers to an "enclosure":

> DEFINITIONS
>
> As used herein:
>
> "Ambient pressure" refers to the existing pressure within the enclosure of the AP-MALDI apparatus. The enclosure generally may have small openings or ports. However, the enclosure may also be sealed. The ambient pressure is greater than 100 mTorr, and may be much higher, such as greater than 1 Torr, 100 Torr, 1000 Torr, 2500 Torr and at pressures intermediate to 100 mTorr and 2500 mTorr. It is understood the pressures above 760 Torr mean that the system is under a positive pressure.
>
> "Atmospheric pressure" is a subset of "ambient pressure" and refers to the normal air pressure, e.g., 760 mm Hg at sea level. Near or at about atmospheric pressure refers to pressures that are between about +15% and -15% of atmospheric pressure, preferably between about +10% and -10% more preferably between about +5% and -5%. Atmospheric pressure is most preferred. In some cases, a positive pressure (e.g. inert gas) is on the system to control the flow.

Bai specification at 10, ll. 5-14. However, these definitions lack the "reasonable clarity, deliberateness, and precision" required to demonstrate an intent to modify the standard definitions of "ambient pressure" and "atmospheric pressure" by having them imply the presence of a surrounding enclosure. See In re Paulsen, 30 F.3d 1475, 1480, 31 USPQ2d 1671, 1674 (Fed. Cir. 1994)("Although an inventor is indeed free to define the specific terms used to describe his or her invention, this must be done with reasonable clarity, deliberateness, and precision. 'Where an inventor chooses to be his own lexicographer and to give terms uncommon meanings, he must set out his uncommon definition in some manner within the patent disclosure'

[17] "Ambient pressure" is "[t]he pressure of the surrounding medium, such as a gas or liquid, which comes into contact with an apparatus or with a reaction." McGraw-Hill Dictionary 75.

so as to give one of ordinary skill in the art notice of the change. See Intellicall, Inc., v. Phonometrics, Inc., 952 F.2d 1384, 1387-88, 21 USPQ2d 1383, 1386 (Fed. Cir. 1992)."). In our view, the specification's definition of "ambient pressure" as "refer[ring] to the existing pressure within the enclosure of the AP-MALDI apparatus" can be understood as an intent to direct the reader's attention to the location of the ambient-pressure region of interest in Bai's sole disclosed embodiment, which has an ionization enclosure. Nor does the fact that this sole embodiment employs an ionization chamber constitute sufficient reason for reading the ionization chamber into the count. See Taskett v. Dentlinger, 344 F.3d 1337, 1340, 68 USPQ2d 1472, 1475 (Fed. Cir. 2003) ("According to Taskett, interpretation of the term “financial authorization”must be limited by the specification. Though it is true that we must read a claim in light of the specification, rarely will we limit the claim to the preferred embodiments described in that specification. Amgen Inc. v. Hoechst Marion Roussel, Inc., 314 F.3d 1313, 1325, [65 USPQ2d 1385, 1392-93] (Fed. Cir. 2003)."). Therefore, even when "atmospheric-pressure" is construed in light of Bai's disclosure, it is evident from the disclosure and the plain meaning of "atmospheric-pressure" that that term does not imply the presence of a surrounding enclosure. Under these circumstances, it would be improper to consider the parties' expert testimony on this question. Vitronics, 90 F.3d at 1582, 39 USPQ2d at 1577.

In any event, we agree with Bai that assuming the Bai count alternative does require an atmospheric-pressure ionization enclosure, this requirement would be satisfied by an atmospheric-pressure laboratory room containing the ionization apparatus and the spectrometer.

BAI'S CASE-IN-CHIEF[18] FOR PRIORITY

Because junior party Bai's involved application and the application that matured into senior party Laiko's involved patent were copending, Bai's evidentiary burden on the issue of priority is a proof by a preponderance of the evidence. 37 CFR § 1.657(b); Bosies v. Benedict, 27 F.3d 539, 541-42, 30 USPQ2d 1862, 1864 (Fed. Cir. 1994). Evidence satisfies this burden of proof if it demonstrates that it is more likely than not that the alleged acts actually occurred. See Bosies, 27 F.3d at 542, 30 USPQ2d at 1864 (the preponderance of the evidence standard requires the finder of fact to believe that the existence of a fact is more probable than its nonexistence).

Bai's preliminary statement[19] names Bai, Fischer, and Flanagan, all of the inventors named in the application, as the inventors of the subject matter of the count. Bai asserts conception no later than 19 December 1997 and actual reductions to practice on 23 December 1997 and 20 January 1998.

Bai's alleged 19 December 1997 conception

As explained in Kridl v. McCormick, 105 F.3d 1446, 1449-50, 41 USPQ2d 1686, 1689 (Fed. Cir. 1997):

> Conception is the formation "in the mind of the inventor of a definite and permanent idea of the complete and operative invention, as it is thereafter to be applied in practice." Coleman v. Dines, 754 F.2d 353, 359, 224 USPQ 857, 862 (Fed. Cir. 1985) (quoting Gunter v. Stream, 573 F.2d 77, 80, 197 USPQ 482, 484 (CCPA 1978))

---

[18] A party's "case-in-chief" is defined in 37 CFR § 1.601(d) to mean "that portion of a party's case where the party has the burden of going forward with evidence." A "case-in-rebuttal" is "that portion of a party's case where the party presents evidence in rebuttal to the case-in-chief of another party." 37 CFR § 1.601(e).

[19] Paper No. 38.

> (emphasis omitted). Conception must include every feature or limitation of the claimed invention. Davis v. Reddy, 620 F.2d 885, 889, 205 USPQ 1065, 1069 (CCPA 1980). "Conception must be proved by corroborating evidence which shows that the inventor disclosed to others his 'complete thought expressed in such clear terms as to enable those skilled in the art' to make the invention." Coleman, 754 F.2d at 359, 224 USPQ at 862 (quoting Fields v. Knowles, 37 C.C.P.A. 1211, 183 F.2d 593, 601, 86 USPQ 373, 379 (CCPA 1950)). However, "there is no final single formula that must be followed in proving corroboration." Berry v. Webb, 56 C.C.P.A. 1272, 412 F.2d 261, 266, 162 USPQ 170, 174 (CCPA 1969). Rather, the sufficiency of corroborative evidence is determined by the "rule of reason." Price [v. Symsek], 988 F.2d [1187,] at 1195, 26 USPQ2d [1031,] at 1037 [(Fed. Cir. 1993)]; Berry, 412 F.2d at 266, 162 USPQ at 173.

Dr. Michnowicz, then the manager of Intellectual Property and New Technologies at Hewlett-Packard (HP), the predecessor of assignee Agilent,[20] testified that by no later than the end of November 1997, he was approached by inventor Steven Fischer regarding the possibility of including research related to generating ions using a laser and matrix at atmospheric pressure in the Mass Spectrometry research and development group, which was within Michnowicz's area of responsibility. Michnowicz Decl. (BX 2092) ¶¶ 4-5. In support of this proposed program of research, Dr. Michnowicz authorized Jian Bai, an expert in MALDI-TOF, to work with Fischer and approved the acquisition of the necessary parts to develop an AP-MALDI apparatus. Id. at ¶ 5.

In November 1997, a first prototype of the AP-MALDI apparatus allegedly was assembled in Lab 23 and tested with a mass spectrometer without success. Bai Decl. (BX 2087) ¶¶ 29-37; Fischer Decl. (BX 2044) ¶¶ 27-35. Fischer explains:

> 34. Initially, we had attempted to acquire an ion trap as it would facilitate ion collection for AP-MALDI. Because an ion trap was not available, we acquired a single quadrapole liquid chromatography/mass spectrometry

[20] Bai Decl. (BX 2087) ¶ 2.

> ("LC/MS") system to conduct our experiment because it was suitable to confirm ion generation from an AP-MALDI. We also acquired standard LC/MS software for data collection and a lab stand for holding the sample target. At HP at the time, the mass spectrometers were given names of rivers. The particular mass spectrometer we acquired was known as "Yukon."

Id. at ¶ 34. The laser and laser optics were obtained by disassembling an HP2010 MALDI-TOF system. Id. at ¶ 33. In contrast to the laser optics employed in the December 1977 tests, those employed in the November test were incomplete. Id. at ¶ 41. Fischer further explains:

> 35. After gathering the materials, we set-up [sic] our first AP-MALDI prototype. We removed the electrospray chamber from the LC/MS instrument. We suspended the sample surface from the lab stand in front of the API capillary of the LC/MS. In November 1997 we conducted at least one test on the AP-MALDI prototype in Lab 23, but the test results did not indicate the detection of ions.

Id. at ¶ 35. As will appear, although Bai's record does not include a description of the internal components of the "Yukon" instrument, which was also used in the alleged 23 December 1997 actual reduction to practice, those details are not needed to decide the issues raised by the parties.

By 19 December 1997, after acquiring a laser having complete optics, the AP-MALDI apparatus and the "Yukon" instrument were set up in Lab 22, which is adjacent to Lab 23 and shares with Lab 23 ventilation and power systems that were separate from the rest of the building. Id. at ¶¶ 38, 40. The 19 December test, which involved a matrix material but no analyte material, is described in the "12/19" entries at pages 71-73 of Fischer's laboratory

notebook (BX 2066[21]), Fischer Decl. (BX 2044) ¶¶ 42-45, of which page 72 (also in evidence as BX 2068) contains the following sketch of the test setup:

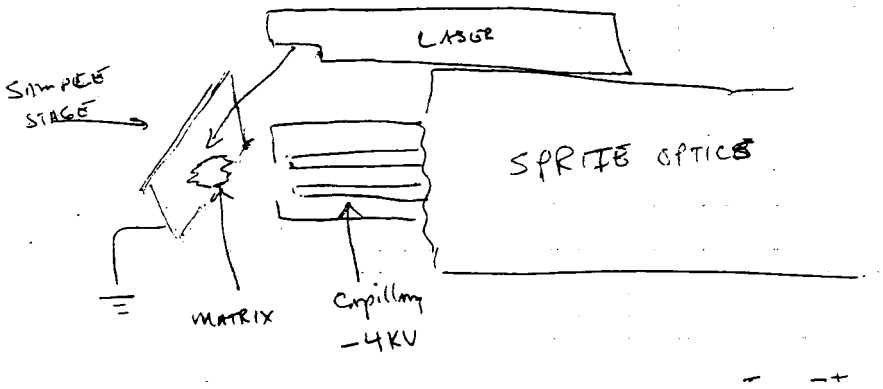

The handwritten text of the 12/19 entries reads as follows:

> Set up to test on a LC/MSD the possibility of generating ions at atmosphere by MALDI. The set up involves the removal of the spray chamber. In front of the capillary is a metal plate suspended in air by a lab stand. The metal plate (sample stage) is held at ground potential.
>
> The API capillary is held at -4KV. The drying gas is set to 7 l/min and a temperature of 100°C. A laser w/ complete optics was taken from the MALDI-TOF 2010 product. The laser was driven by a 24 V power supply and the pulse was generated by a HP random pulse generator. A 20 Hz square wave set to 10V was used to trigger the laser. The laser was oriented above the sample.
>
> The matrix used was alpha-cyano $[M+H]^+$ = 190 amu. This matrix is very commonly used for positive ion MALDI because of the low energy needed to ionize it and samples. Data was acquired from acquisition with a scan range of 188-192 m/z with a fragmentor setting of 50V. The data collection was set to

[21] Laiko asserts that the handwritten note "Conception + Reduction to Practice" at the top of the first page of this exhibit and similar handwritten notes at the top of BX 2077, which is identified as a copy of a page from Bai's laboratory notebook, require that "the original rationale for requiring corroboration--to avoid fraud--must be considered." LOppBr 53. Bai moved to supplement the record with evidence explaining these notations (Paper No. 117). In a 13 November 2003 panel decision entitled "Decision on Miscellaneous Motion to Supplement the Record" (Paper No. 128), that motion was denied on the ground that Laiko's accusation of fraud lacks sufficient supporting evidence and thus requires no evidentiary response by Bai. Id. at 2. Consequently, there is no need to further address that issue in this opinion.

> 0.01 min width. A clear signal of 190 and 191 was observed. Clearly matrix ions are generated!!

BX 2066. BX 2064 is a photograph of a 2003 reconstruction of the 19 December 1997 test setup, with Roman numerals added to identify the sample surface (I), the API capillary (II), LC/MSD instrument (III), and the laser with complete optics (IV). Fischer Decl. (BX 2044) ¶ 41.

BX 2070 is described as "a true and accurate copy of the chromatograms and MS spectrum generated by the December 1997 test of the AP-MALDI apparatus." Fischer Decl. (BX 2044) ¶ 45. Laiko apparently accepts the printed "12/19/97" date which appears at the bottom left-hand corner of this exhibit as correct, because he criticizes BX 2077 [relating to the alleged 20 January 1998 actual reduction to practice] for failing to include such a date: "[T]he chromatogram and mass spectrum on Bai's Exhibit 2077 do not include a computer printout of the test date . . . In contrast, the other mass spectra and chromatograms in Bai's inventor notebooks do include a printout of the test date [citing BX 2070 and BX 2072]." LOppBr 54. The mass spectrum shown in BX 2070 is identical to the mass spectrum shown in Figure 3A, reproduced above, of Bai's involved application, which is a matrix spectrum from 188 m/z to 192 m/z with matrix peaks at about 190 and 191 m/z. Of the three chromatograms in BX 2070, Bai relies on only the third, reproduced below, which is also Figure 3 in Bai's application:

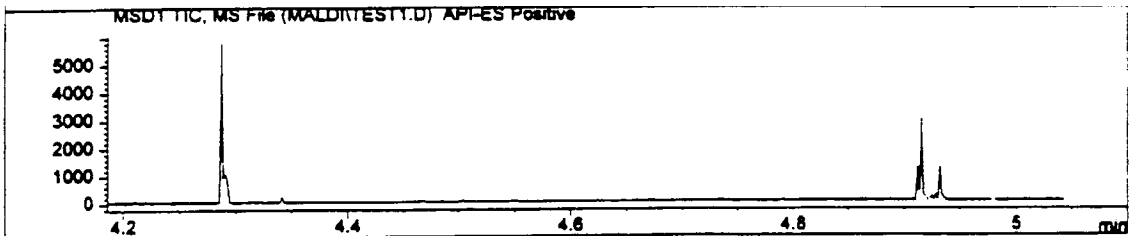

Laiko concedes that the foregoing evidence, particularly the production of the mass spectrum of the matrix material, demonstrates that on 19 December 1997 the AP-MALDI apparatus generated and transported sufficient ions of the matrix material to the LC/MSD instrument. In fact, Dr. Baldwin, a Laiko witness, conceded that "the mass spectrum of the matrix illustrated in Bai Exhibit 2070 is evidence that the matrix ions were both generated and transported to the mass spectrometer." Baldwin Decl. (LX 1074) ¶ 69. Nevertheless, Laiko argues that the 19 December 1997 test fails to establish conception because it fails to show conception of an ionization apparatus which (1) includes an ionization chamber and (2) generates and transports analyte (as opposed to matrix) ions to a mass spectrometer, features which Laiko contends are required by the Bai count alternative. Argument (1) fails because, as explained above, the term "atmospheric-pressure" does not imply the presence of an atmospheric-pressure ionization chamber. Furthermore, even it did, we agree with Bai that Lab 22 can accurately be described as an atmospheric-pressure ionization chamber, as nothing in the count language precludes the ionization chamber from surrounding the spectrometer. Argument (2) fails in view of the references to "AP-MALDI" in Michnowicz's above-noted testimony that he had authorized acquisition of the parts necessary to develop an AP-MALDI apparatus by no later than the end of November 1997, Michnowicz Decl. (BX 2092) ¶ 5, and in the 12/19 entry at

page 71 of Fischer's notebook (BX 2066), which begins: "Set up to test on a LC/MSD the possibility of generating ions at atmosphere by MALDI." The term "MALDI" implies the use of a laser and a matrix to cause ionization of another material, i.e., an analyte.

Consequently, we are crediting Bai with a conception date of 19 December 1997.

Bai's alleged 23 December 1997 actual reduction to practice

As explained above, rather than reciting the spectrometer as one of the elements of the count, the Bai count alternative requires only that the recited ionization apparatus be capable of an operative connection with the spectrometer, which we have held need not produce a mass spectrum of the analyte material. However, an actual reduction to practice requires a determination that the subject matter recited by the count is satisfactory for its intended purpose. See Eaton v. Evans, 204 F.3d 1094, 1097, 53 USPQ2d 1696, 1698 (Fed. Cir. 2000):

> [A] party seeking to establish an actual reduction to practice must satisfy a two-prong test: (1) the party constructed an embodiment or performed a process that met every element of the interference count, and (2) the embodiment or process operated for its intended purpose. See Cooper [v. Goldfarb], 154 F.3d [1321,] 1327, 47 USPQ2d [1896,] 1901 [(Fed. Cir. 1998)]; Estee Lauder Inc. v. L'Oreal S.A., 129 F.3d 588, 593, 44 USPQ2d 1610, 1614 (Fed. Cir. 1997) (requiring that the invention work for its intended purpose before an actual reduction to practice exists).

This obligation applies even if the intended purpose is not recited in the count. See DSL Dynamic Sciences Ltd v. Union Switch & Signal, 928 F.2d 1122, 1125, 18 USPQ2d 1152, 1154 (Fed. Cir. 1991)("[P]roof of actual reduction to practice requires a showing that 'the embodiment relied upon as evidence of priority actually worked for its intended purpose.' Newkirk v. Lulejian, 825 F.2d 1581, 1582, 3 USPQ2d 1793, 1794 (Fed. Cir. 1987). This is so even if the

'intended purpose' is not explicitly set forth in the counts of the interference. See, e.g., Elmore v. Schmitt, 278 F.2d 510, 47 CCPA 958, 125 USPQ 653 (CCPA 1960); Burns v. Curtis, 172 F.2d 588, 36 CCPA 860, 80 USPQ 587 (CCPA 1949))." As this is clearly not a case where the invention is so simple that it required no testing to determine its suitability for its intended purpose, cf. King Instrument Corp. v. Otari Corp., 767 F.2d 853, 861, 226 USPQ 402, 407 (Fed. Cir. 1985)("[s]ome devices are so simple and their purpose and efficacy so obvious that their complete construction is sufficient to demonstrate workability.")(quoting Eastern Rotorcraft Corp. v. United States, 384 F.2d 429, 431, 155 USPQ 729, 730 (Ct.Cl. 1967)), Bai must demonstrate that the atmospheric-pressure ionization device was tested and found to have worked satisfactorily for its intended purpose.

Laiko contends (1) that Bai's specification indicates that the intended purpose of the recited "atmospheric-pressure ionization apparatus" is to generate and transport sufficient analyte ions to a mass spectrometer for producing a mass spectrum of the analyte, and (2) that an actual reduction to practice of such an apparatus requires connecting the AP-MALDI apparatus to a mass spectrometer and producing a mass spectrum of the analyte. LOppBr 16-17, 47-50. In support of the first contention, Laiko relies on the above-discussed statement in Bai's application (at 1, ll. 19-27) that a "mass spectrometer generally contains . . . (5) a data processing system that produces a mass spectrum of the analyte." LOppBr. 31. We agree with Laiko that this statement is sufficient to establish that the intended use of the AP-MALDI apparatus is with a mass spectrometer that produces mass spectra of analyte materials. However, it does not necessarily follow that Bai was required to test the AP-MALDI apparatus with such a mass spectrometer in

order to prove the apparatus's suitability for that purpose. It is sufficient if the tests demonstrated the capability of the AP-MALDI apparatus to generate and transport sufficient analyte ions to such a mass spectrometer. See DSL, 928 F.2d at 1125, 18 USPQ2d at 1154 ("tests performed outside the intended environment can be sufficient to show reduction to practice if the testing conditions are sufficiently similar to those of the intended environment. Tomecek v. Stimpson, 513 F.2d 614, 618, 185 USPQ 235, 239 (CCPA 1975)."). The fact that Bai's 23 December test did not yield a mass spectrum of the analyte material therefore is not dispositive, as Laiko contends.

Turning now to the evidence, Fischer testified that

> [b]ecause the matrix signal acquired on December 19, 1997 was relatively weak, we wanted to collect the data in a mode that would maximize the sensitivity and confirm that [the] signal generated from a matrix-analyte mixture was the analyte and not an artifact or background. Thus, we needed software that could collect data at a rate faster than 20 Hz.

Fischer Decl. (BX 204) ¶ 46.[22] Erik Reinecke, a coworker in HP's research and development organization who at that time was primarily responsible for the internal hardware and software support for over forty LC and GC (gas chromatography) systems, was approached for a solution. Id.; Reinecke Decl. (BX 2042) ¶¶ 2, 8. Reinecke explained that

---

[22] The inventors' testimony and exhibits relied on as proof of the alleged 23 December 1997 actual reduction to practice are not challenged by Laiko as lacking the necessary corroboration. See Brown v. Barbacid, 276 F.3d 1327, 1335, 61 USPQ2d 1236, 1240 (Fed. Cir. 2002) ("[I]ndependent evidence (evidence or physical evidence from a source other than [inventor] Dr. Reiss) must corroborate Dr. Reiss' testimony to show an actual reduction to practice."). However, the testimony and exhibits relating to the alleged 20 January 1998 actual reduction to practice are challenged on that ground.

> [t]he program that the AP-MALDI research group was using at that time did not address the stability and signal issues inherently associated with a pulsed technique, such as AP-MALDI. The normal macro used for a GC/MS or LC/MS device, for example, was too slow to capture sufficient ions in the AP-MALDI device. Accordingly, I adapted a macro that was originally written for a GC/MS system such that data was captured in selective ion monitoring (hereinafter "SIM") mode at a slower rate so that synchronization with the laser fire would not be necessary. Soon after I finished the macro in December 1997, I was aware that the AP-MALDI research group had collected test data. By December 24, 1997, I was aware that the AP-MALDI research group had memorialized their test results in Steve Fischer's notebook as well as in the invention disclosure statement filed with HP's legal department.

Id. at ¶ 9.

On 23 December 1997, the test apparatus (using the modified macro), under the same operating conditions that were employed in the 19 December test, was used to irradiate a target material containing both α-cyano as a matrix and bradykinin as an analyte. Fischer Decl. (BX 2044) ¶ 47. These test results do not include a mass spectrum of the analyte, instead consisting of two sets of "selected ion monitoring" (SIM) chromatograms with the mass filter of the LC/MSD instrument set to two different mass-to-charge ratios, respectively. Id. at ¶¶ 47-50. The first set of chromatograms (BX 2072[23]) represents capture intervals # 1 to #10 with the mass filter set at 1061 m/z, which corresponds to the $[M+H]^+$ ion of bradykinin. Fischer Decl. (BX 2044) ¶¶ 47, 49. Capture intervals #4 to #7 are reproduced below:

[23] Also in the record as the sixth page of BX 2076, the HP "Invention Disclosure."

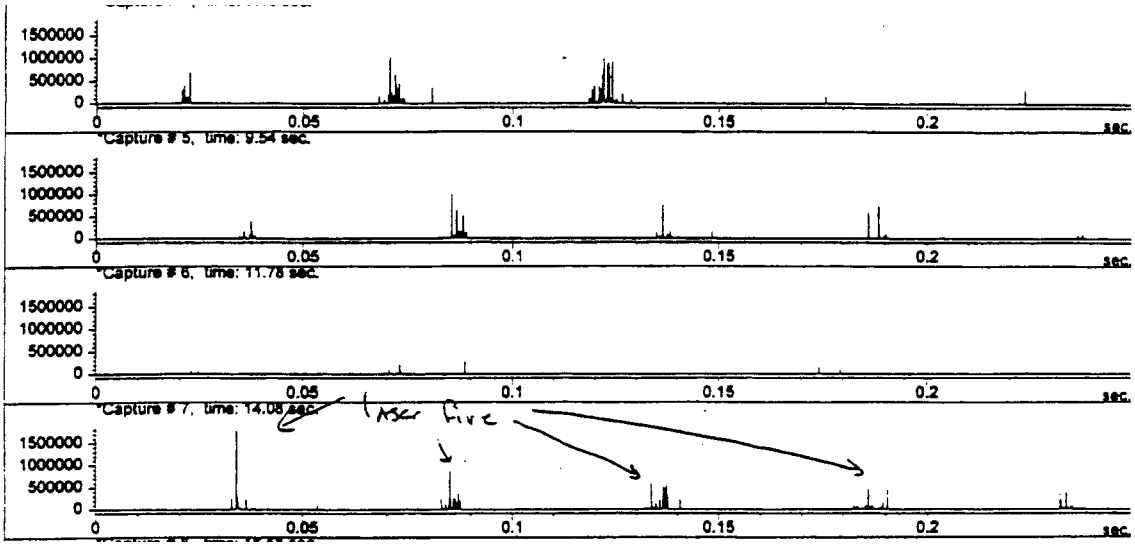

Fischer explains that "a repeat pattern of signal every 50 milliseconds (corresponding to the [20 Hz] laser firing) could be seen wherein the signals were very often intense with counts as great as 1.5 x 10^6." Fischer Decl. (BX 2044) ¶ 49.

The second set of chromatograms (BX 2074[24]), which consists of capture intervals #1 to #10 with the mass filter set at 1900 m/z and with an ion count scale which is 1,000 times greater than the scale used when the mass filter was set at 1061 m/z, shows almost no ion activity. Fischer Decl. (BX 2044) ¶ 50. Capture intervals #4 to #7 are reproduced below:

[24] Also the seventh page of BX 2076.

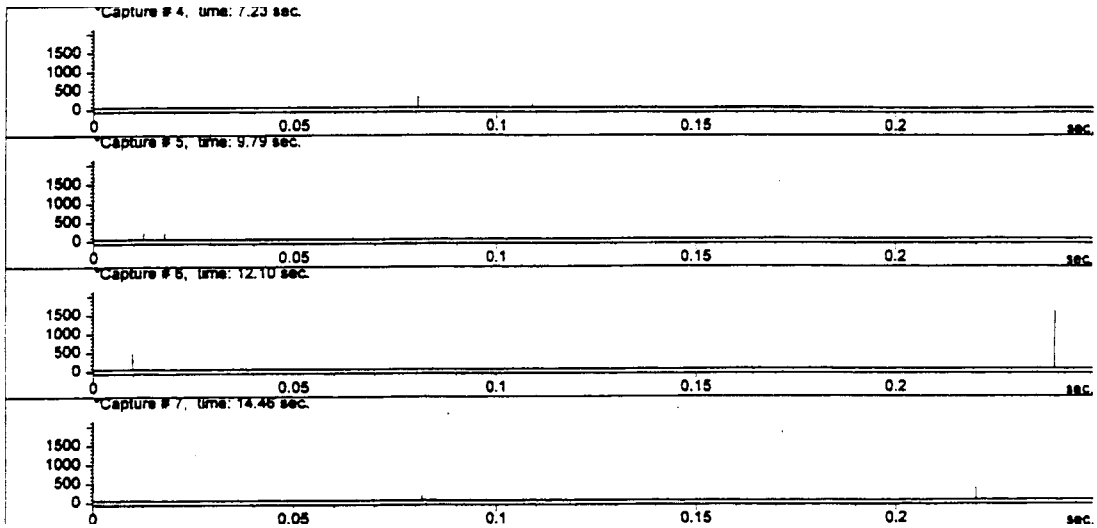

Bai contends that

> because the signal events depicted in Bai Exhibit 2072 were substantially greater than the patterns associated with background in Bai Exhibit 2074, those chromatograms demonstrated . . . that the signal events depicted in Bai Exhibit 2072 were due to the analyte ions as opposed to noise or some other artifact. . . . Thus, those chromatograms . . . indicated . . . that Bai's AP-MALDI apparatus successfully generated analyte ions.

BBr 24, ¶ 44. In addition to being supported by the testimony by the inventors, Bai Decl. (BX 2087) ¶ 52; Fischer Decl. (BX 2044) ¶ 50; Flanagan Decl. (BX 2046) ¶ 45, the foregoing interpretation of the 23 December chromatograms (i.e., BX 2072 and BX 2074[25]) finds support in the testimony of Reinecke:

> 12. Based on my extensive experience with mass spectrometers, I am confident that the chromatograms and MS Spectra data of Bai Exhibits 2070, 2072, and 2074 would be virtually impossible to produce unless analyte and matrix were ionized from the disclosed matrix and analyte materials and detected with the described devices [sic, device], e.g., mass spectrometer. . . .

[25] BX 2070, also mentioned by Reinecke, is the 19 December chromatogram of the matrix material.

13. The chromatograms of Bai Exhibit 2072 show a repeat pattern of signal every 50 milliseconds wherein the signals are often very intense with counts as great as 1.5 x 10^6. These signals indicated that ions were generated by the described AP-MALDI apparatus and detected by the mass spectrometer. . . . Because bradykinin is a peptide that would be detected at 1061 *m/z*, this data [in BX 2072] is consistent with the detection of bradykinin ions. [Reinecke's italics.]

14. . . . The chromatograms of Bai Exhibit 2074 showed no signal on a scale 1000 times larger than that shown in Bai Exhibit 2072 and thereby indicated that no ions were detected. Because the signal events depicted in Bai Exhibit 2072 were substantially greater than the patterns associated with background in Bai Exhibit 2074, these chromatograms demonstrated that the signal events depicted in Bai Exhibit 2074 were due to the analyte ions as opposed to noise or some other artifact. Thus, these chromatograms indicated that the AP-MALDI apparatus was successfully generating analyte ions.

Reinecke Decl. (BX 2042) ¶¶ 12-14. Testimony to the same effect was given by James Bertsch, who from 24 December 1997 to 18 January 1998 was part of HP's Mass Spectrometry research and development group. Bertsch Decl. (BX 2085) ¶¶ 4-5, 11-13. Neither of these witnesses was cross-examined by Laiko about this or any other part of their declaration testimony.

Instead, Laiko argues that the chromatograms are insufficient to demonstrate the detection of bradykinin ions for the reasons given in paragraphs 67-71 of Dr. Baldwin's declaration testimony (LX 1074). Although this declaration is entitled "DECLARATION OF DR. MICHAEL A. BALDWIN (In Support of Laiko's Priority Case)," paragraphs 67-78 appear under the heading "Bai's Alleged Reduction to Practice" and thus constitute "rebuttal" testimony on behalf of Laiko. See 37 CFR § 1.601(e)("Case-in-rebuttal means that portion of a party's case where the party presents evidence in rebuttal to the case-in-chief of another party."). Bai responded to Dr. Baldwin's rebuttal testimony by filing a "DECLARATION OF STEVEN M. FISCHER (Rebuttal Evidence)" (BX 2118) and a "DECLARATION OF DR. JOHN B. FENN

(Rebuttal Evidence)" (BX 2117), both of which are critical of Dr. Baldwin's rebuttal reasoning and conclusions. We need not decide Laiko's motion to suppress the Fenn declaration, because, as explained below, the insufficiency of Dr. Baldwin's rebuttal testimony is apparent without considering the Fenn declaration, which therefore will not be considered.

Dr. Baldwin contends that production of an analyte mass spectrum was essential to proving that bradykinin ions were generated and transported to the LC/MSD instrument, because

> [t]he recognized standard in the field of mass spectrometry for verification of a successful test of an "ionization apparatus for connection to a spectrometer" is the successful production of an analyte ion mass spectrum. Successful mass spectra have identifiable patterns of mass peaks. Known analytes such as bradykinin and CZE peptide standard (as used by Bai and Laiko respectively), are used to test mass spectrometry ionization apparatus specifically because these peptides have easily recognized, well known, and well documented spectra with patterns of mass peaks that readily allow those skilled in the art to determine whether an experiment is successful or not. Absent any mass spectrum, those of skill in the art cannot say whether or not **analyte** ions have been **successfully** transported to the spectrometer.

Baldwin Decl. (LX 1074) ¶ 68. (Laiko's emphasis.) No documentary evidence is cited in support of these assertions. Instead, Dr. Baldwin explains that the differences between the 1061 m/z and 1900 m/z chromatograms fail to establish that bradykinin ions were detected for the following reasons: (1) "large variations in signal/noise can be encountered when the mass spectrometer settings are changed by large amounts, such as from 1061 m/z to 1900 m/z, particularly for a quadrupole mass spectrometer," Baldwin Decl. (LX 1074) ¶ 71; and

(2) "nearby signal spikes may occur with selective ion monitoring and may be inadvertently introduced into the mass spectrometer, depending upon the specifications and the setting of the

mass spectrometer. Such individual spikes could be responsible for the difference in signals of Bai's 1061 m/z and 1900 m/z chromatograms." Id. These reasons, however, are highly speculative, as Dr. Baldwin admitted when he stated: "I am not aware of any basis for others in the art to determine, whether sensitivity changes in the mass spectrometer or generation of spurious ions (or some other phenomenon) may be responsible for the difference in signal between Bai's 1061 m/z chromatogram and 1900 m/z chromatogram." Id. In the absence of documentary evidence or test results confirming and quantifying these alternative explanations for the differences between the 1061 m/z and 1900 m/z chromatographs, they are entitled to little weight. See Ashland Oil, Inc. v. Delta Resins & Refractories, Inc., 776 F.2d 281, 294, 227 USPQ 657, 665 (Fed. Cir. 1985), cert. denied, 475 U.S. 1017 (1986)("Lack of factual support for expert opinion going to factual determinations . . . may render the testimony of little probative value in a validity determination. Cf. In re Altenpohl, 500 F.2d 1151, 1158, 183 USPQ 38, 44 (CCPA 1974)."). Moreover, these alternative theories fail to adequately address the fact that the 1061 m/z chromatograph shows an apparent synchronism between ion detection and the firing of the laser.

For the foregoing reasons, we hold that the 23 December 1997 chromatograms are sufficient to prove, by a preponderance of the evidence, that on that date the AP-MALDI apparatus generated bradykinin 1061 m/z ions and transported them to the LC/MSD instrument, where they were detected and counted. Furthermore, in the absence of any persuasive evidence to the contrary we hold that it is reasonable for Bai to assume that the AP-MALDI apparatus was also capable of generating analyte ions having other mass-to-charge ratios. Dr. Baldwin's above-

noted assertion that detection of a "pattern" of mass peaks was required is not supported by a explanation of why an AP-MALDI apparatus which has found to be capable of generating and transporting analyte ions having a first mass-to-charge ratio (e.g., 1061) would not have been expected to be capable of generating and transporting analyte ions having other mass-to-charge ratios.

For the foregoing reasons, we are crediting Bai with a 23 December 1997 actual reduction to practice.

On the next day, 24 December 1997, James Bertsch and Erik Reinecke witnessed the HP "Invention Disclosure" (BX 2076), which includes, inter alia, a typed discussion of the 23 December test and copies of the 1061 m/z and 1900 m/z chromatograms, all of which were witnessed on that date by Bertsch and Reinecke. Bertsch Decl. (BX 2085) ¶ 8; Reinecke Decl. (BX 2042) ¶ 11.

Bai's alleged 20 January actual reduction to practice

While our crediting Bai with a 23 December 1997 actual reduction to practice obviates the need to decide whether Bai additionally should be credited with the alleged 20 January 1998 actual reduction to practice, we will address that question in the interest of completeness.

Dr. Bai testified that on 20 January 1998 he replaced the quadrupole mass spectrometer used in the December 1997 tests with an ion trap mass spectrometer, used the AP-MALDI apparatus (including a first sample surface of stainless steel and a second that was gold-plated) to irradiate a sample containing a matrix of alpha-cyano and an analyte of cytochrome c protein digest (trypsin)," Bai Decl. (BX 2087) ¶ 58, and obtained the following Total Ion Current (TIC)

plot and MS spectrum, which he affixed to page 32 of his laboratory notebook (BX 2077[26]) together with a description of the test conditions. Id. at ¶¶ 64-65.

We agree with Laiko 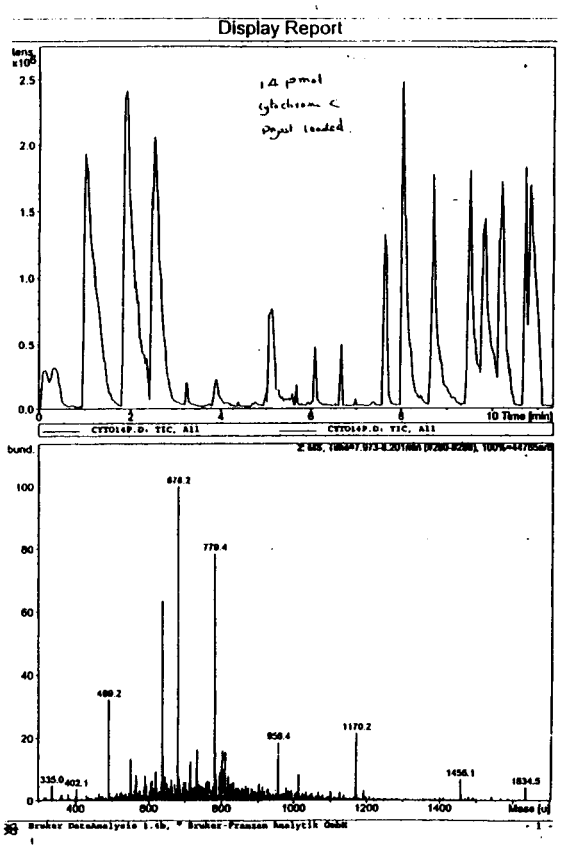

that this alleged reduction to practice lacks sufficient corroboration. In contrast to pages 71-74 of Fischer's notebook (BX 2066), Bai's notebook page was not witnessed by anyone. Nor did anyone other than Bai claim to have witnessed the alleged

[26] As explained supra, Laiko's contention that the notes referring to conception and reduction to practice at the top of this exhibit raise a question of fraud was rejected in the 13 November 2003 "Decision on Miscellaneous Motion to Supplement the Record" (Paper No. 128).

20 January 1998 test. As corroboration, Bai relies on a 16 February 1998 e-mail (BX 2082) from Sue Mazer, the direct supervisor of the research and development group, Mazer Decl. (BX 2079), which includes the following summary of Dr. Bai's work during the preceding three-week period:

> 1. More experimenting on AP-MALDI on ion trap, including peptide mixture analysis, peptide on PVDF, and ms/ms.
> 2. Spent some time searching/reviewing literatures/patents.

This e-mail fails as corroboration because it has not been shown that the above information was obtained independently of Dr. Bai. Also, it lacks sufficient details to establish that the experiments were successful.

For the foregoing reasons, we agree with Laiko that Bai cannot be credited with an actual reduction to practice on 20 January 1998.

LAIKO'S CASE-IN-CHIEF FOR PRIORITY

Bai does not deny that Laiko should be credited with an actual reduction to practice on 14 March 1998, which is almost three months prior to the 6 June 1998 filing date of Laiko's involved patent.[27] Laiko therefore can prevail on the issue of priority by proving conception prior to Bai's 19 December 1997 conception date coupled with diligence throughout the "critical period" which begins just before Bai's 19 December 1997 conception date and ends with Laiko's

14 March 1998 actual reduction to practice date. 35 U.S.C. § 102(g); Mahurkar v. C.R. Bard, Inc., 79 F.3d 1572, 1578, 38 USPQ2d 1288, 1291 (Fed. Cir. 1996)("Where a party is first to

[27] Laiko has not been accorded and does not seek the benefit of any earlier-filed application.

conceive but second to reduce to practice, that party must demonstrate reasonable diligence toward reduction to practice from a date just prior to the other party's conception to its reduction to practice."); Monsanto Co. v. Mycogen Plant Science Inc., 261 F.3d 1356, 1368, 59 USPQ2d 1930, 1938 (Fed. Cir. 2001)("Having determined that the diligence issue was before the jury, we now identify the period for which diligence must have been shown—the critical period.").

In view of the granting of Laiko's Motion 1 under 37 CFR § 1.634 to correct the inventorship of the Laiko et al. involved patent by removing Dr. Alma L. Burlingame as an inventor, the inventorship of the patent is now the same as Laiko's preliminary statement, which names Victor V. Laiko as the sole inventor of the subject matter of the count. As Dr. Burlingame is not identified as an inventor in Laiko's preliminary statement, whose accuracy in this regard Bai does not dispute, Dr. Burlingame's testimony and documents can be relied on to corroborate Dr. Laiko's testimony and documents. "The inventor . . . must provide independent corroborating evidence in addition to his own statements and documents." Cooper v. Goldfarb, 154 F.3d 1321, 1330, 47 USPQ2d 1896, 1904 (Fed. Cir. 1998)(quoting Hahn v. Wong, 892 F.2d 1028, 1032-33, 13 USPQ2d 1313, 1317 (Fed. Cir. 1989)); Holmwood v. Sugavanam, 948 F.2d 1236, 1239,

20 USPQ2d 1712, 1715 (Fed. Cir. 1991)("Only an inventor's testimony needs corroboration.")

During the time period in question, Dr. Laiko worked at the University of California, San Francisco ("UCSF") as a Post Doctorate Fellow in the UCSF Mass Spectrometry Facility, which is associated with the Department of Pharmaceutical Chemistry, School of Pharmacy.

Laiko Decl. (LX 1037) ¶ 3. Presumably as a result of this employment relationship, the involved Laiko patent is assigned to The Regents of the University of California.

Laiko's alleged 30 October 1997 conception

Dr. Burlingame, who was Dr. Laiko's faculty advisor and had the authority to approve new research projects and authorize the acquisition of resources for their implementation, testified that LX 1041 is a true and accurate copy of an AP-MALDI proposal he received from Dr. Laiko on 30 October 1997. Burlingame Decl. (LX 1075) ¶¶ 14-15, 36-37. The two figures appearing at page 6 of the proposal are reproduced below:

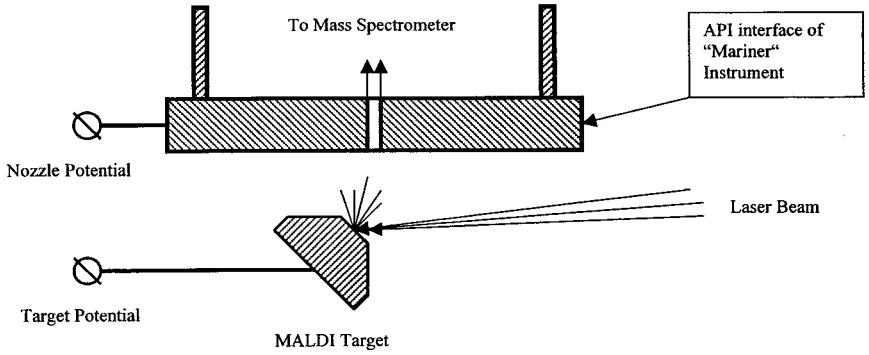

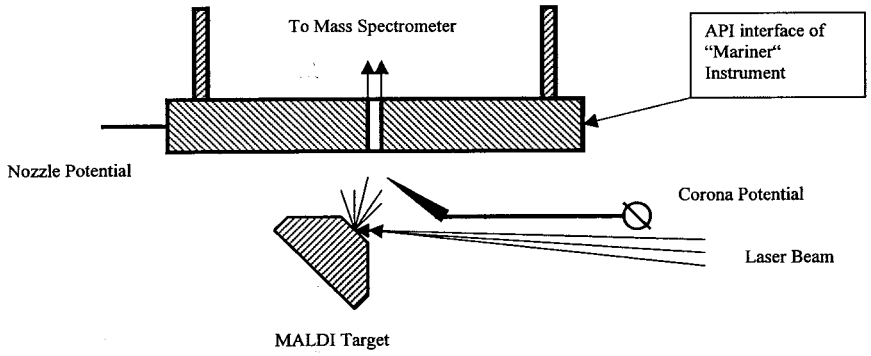

The structure designated as "API interface of 'Mariner' instrument" is the atmospheric pressure interface of a Mariner ESI (electrospray ionization) atmospheric-pressure ortho-TOF mass spectrometer. LX 1041, at 2-3. Although the figures do not show an "atmospheric-pressure ionization chamber" (paragraph a of the Laiko count alternative), Bai does not challenge Laiko's contention that the presence of such a chamber is implied by the reference to pressure as an adjustable parameter in the proposal at page 4, paragraph b, which reads: "In the case of successful detection of (may be [sic]) weak APMALDI signal, a very broad range of experimental parameters may be adjusted. These include bath gas nature, pressure and temperature, special matrixes (including liquids)." Nor does Bai deny that the recited "sample support positioned within said ionization chamber" (paragraph b) and "sample . . . comprising an analyte embedded in an ionization-assisting matrix" (first paragraph c) read on the illustrated "MALDI Target." However, Bai does dispute Laiko's contention that this exhibit establishes conception of the recited "laser for illuminating said sample, to induce . . . release of said analyte ions from said sample, and to induce ionization of said analyte to form said analyte ions" (second paragraph c) and the recited "interface connecting said ionization chamber and said spectrometer for capturing said analyte ions released from said sample and for transporting said analyte ions to said spectrometer" (paragraph d). According to Bai, the language in this proposal and the testimony of Drs. Laiko and Burlingame reveal skepticism about the operability of the proposed AP-MALDI apparatus, with the result that Laiko has not demonstrated a reasonable expectation of success in generating sufficient analyte ions and transporting them to the

spectrometer, as allegedly required by Hitzeman v. Rutter, 243 F.3d 1345, 58 USPQ2d 1161 (Fed. Cir. 2001). In support, Bai notes the proposal's observation that

> [t]he sensitivity of a proposed APMALDI instrument (Fig. 1) may be expected [to be] much less compared with [the] usual MALDI TOF instrument. Assuming the same ion production in both cases, ion transparency of any atmospheric pressure interface is much less than 100%; in usual MALDI instrument nearly 100% of produced ions are detected. Thus a main goal of a first experiments may be just to prove a possibility of [the] new APMALDI technique.

LX 1041, at 3-4. Dr. Laiko explained the reasons for this skepticism as follows:

> A. At that time, to the best of my knowledge, not even the possibility to generate ions under atmospheric pressure through the MALDI process was demonstrated.
>
> Q. At atmospheric pressure, you mean?
>
> A. Yes. This is the first point. Then if it would be possible, if it was possible, you need to transport the ions. So there are many uncertainties, as usual.
>
> Q. Again, I think I understand you, but just to be clear, you really thought there were at least two problems. One would be when a matrix analyte combination was subjected to a laser at atmospheric pressure, there could be a reasonable doubt that ions were even going to be generated. That would be one.
> And two would be, even if they were generated, would they be captured and transported to the mass spec.
> Do I understand you correctly?
>
> A. Yes. That's right.

Laiko Depo. (LR 61. l. 21 to LR 62, l. 13.) Laiko's skepticism continued until his 14 March 1998 actual reduction to practice:

> MR. VOIGHT: Q. We've talked specifically about the time frame back in October, and what I'm saying is nothing would have changed to change anyone's view between October and the time in March when you demonstrated that it in fact worked?

> A. Change in view? The view of what?
>
> Q. The view basically that AP-MALDI wasn't going to work. That's probably overstated, but the skepticism that AP-MALDI would work, would it continue to exist, would it not, up until the point of the fact that you proved that it would work.
>
> A. That's correct.
>
> Q. Do you remember the date on which you successfully ran an AP-MALDI experiment the first time?
>
> . . . .
>
> A. . . .[O]n March 14th [1998], I detected the analyte ions, and that was unambiguous proof that it works, on March 14th, so that's the date.

Id. at LR 62, l. 24 to LR 63, l. 22. Dr. Burlingame testified that in October 1997 he thought the AP-MALDI idea was "hare-brained and probably wouldn't work," Burlingame Depo., LR 347, ll. 1-2, and that he and everyone else in the lab were amazed when Laiko got AP-MALDI to work in a day or two. Id. at 350, ll. 2-5. Bai also cites Dr. Chait's testimony that he believed "one would have to do a great deal of experimentation" to prepare a device that would work at least adequately to demonstrate that the AP-MALDI principle was sound. Chait Depo. (BX 2010) at 53, l. 16 to p. 54, l. 13.

Bai's argument fails because Laiko's case for conception does not require a showing that Dr. Laiko had a reasonable expectation that the proposed AP-MALDI apparatus would work. "An inventor's belief that his invention will work or his reasons for choosing a particular approach are irrelevant to conception." Burroughs Wellcome Co. v. Barr Laboratories Inc., 40 F.3d 1223, 1228, 32 USPQ2d 1915, 1920 (Fed. Cir. 1994). Bai's reliance on Hitzeman is misplaced for the following reasons. The evidence in that interference showed that Hitzeman

contemplated using a particular DNA expression vector in a yeast host strain to obtain hepatitis B surface antigen (HBsAg), as recited in the count.[28] The question was whether Hitzeman should be credited with conception of using that process to obtain a hepatitis B surface antigen having the specific form recited in the count, i.e., "in particle form having a sedimentation rate which is virtually identical to that of authentic 22 nm hepatitis surface antigen particles." The court, after holding that the particle size and sedimentation rate recitations are material limitations, i.e., not to be treated as inherent in the other limitations, id. at 1354-55, 58 USPQ2d at 1168-69, answered that question in the negative:

> Nothing in the record suggests that Hitzeman had a reasonable expectation that using yeast as a host cell, rather than bacteria, would yield successful assembly of particles, which he specifically claimed. When a research plan requires extensive research before the inventor can have a reasonable expectation that the limitations of the count will actually be met, complete conception has not occurred. [Citations omitted.]

Id. at 1357, 58 USPQ2d at 1169. The Hitzeman court distinguished this holding from Burroughs's above-quoted holding that "[a]n inventor's belief that his invention will work or his reasons for choosing a particular approach are irrelevant to conception," 40 F.3d at 1228, 32 USPQ2d at 1920, by noting that the question in Hitzeman was whether the inventor had a

---

[28] The count contained two alternatives, of which the first read as follows:

> A DNA expression vector capable of replication and phenotypic selection in [a] yeast host strain comprising a promoter compatible with a yeast host strain and a DNA sequence encoding hepatitis B surface antigen, said sequence being positioned together with translational start and stop signals in said vector under control of said promoter such that in a transformant yeast strain it is expressed to produce hepatitis B surface antigen in particle form having a sedimentation rate which is virtually identical to that of authentic 22 nm hepatitis surface antigen particles[.]

reasonable expectation that the recited biological process would achieve the particular recited biological result:

> The above statement in Burroughs . . . was not dealing with whether an inventor had a reasonable expectation of producing the claimed device or composition, but instead whether the inventor had a reasonable expectation that the device or composition, once completed, would work for its intended purpose. Here, in contrast, we are focusing on whether the inventors had a reasonable expectation that they would produce the claimed invention. Here, in contrast, we are focusing on whether the inventors had a reasonable expectation that they would produce the claimed invention. Burroughs concerned six patents directed toward administering a drug, AZT, to AIDS patients. It was undisputed that the inventors had already synthesized the AZT. The claims of the first five patents recited various permutations of administering the AZT to patients, without reciting details of how the human body would react to the drug. See id. at 1225 n.3, 32 USPQ2d at 1917 n.3. As to the claims of these five patents, we held, as quoted above, that the developers of AZT had sufficiently established conception of the limitations of the claims (i.e., the drug itself and the intention to administer it to humans), and that it was immaterial that the inventors lacked a "reasonable expectation" as to how non-claimed aspects of the drug would work (i.e., the particular effect of the drug on the body). Id. at 1228, 32 USPQ2d at 1920. However, as to the claims of the sixth patent, which recited details of an anticipated immune response to the drug (i.e., "a method of increasing the number of T-lymphocytes in a human infected with the [HIV] virus ...."), we held that this claim was not conceived in advance of further studies because of uncertainty as to whether administering AZT actually would promote T-lymphoctye production, i.e., the claimed intended use. Id. at 1231-32, 32 USPQ2d at 1923. Thus, the inventors in Burroughs lacked a "definite and permanent idea" as to whether this recited claim limitation of the sixth patent would be met by administering the drug. Id. at 1230, 32 USPQ2d at 1923. In the present case, like the claims of the sixth patent discussed in Burroughs, Hitzeman claimed the specific result of a biological process. Because Hitzeman failed to show that he had a reasonable expectation that the claimed result of the biological process would occur, his conception argument cannot prevail.

Hitzeman, 243 F.3d at 1358, 58 USPQ2d at 1170. The count before us is not directed to a biological process, let alone a biological process for achieving a specific biological result. Nor does the count specify that the analyte ions are to take a specific form. Thus, Burroughs rather

than Hitzeman controls. Under Burroughs, Bai's argument fails because "[a]n inventor's belief that his invention will work . . . [is] irrelevant to conception," 40 F.3d at 1228, 32 USPQ2d at 1920.

For the foregoing reasons, we are crediting Laiko with a conception date of 30 October 1997.

Laiko's case for diligence

As noted supra, the critical period during for which Laiko must show reasonable diligence runs from just prior to Bai's 19 December 1997 conception up to Laiko's 14 March 1998 actual reduction to practice. 35 U.S.C. § 102(g); Mahurkar, 79 F.3d at 1578, 38 USPQ2d at 1291; Monsanto, 261 F.3d at 1368, 59 USPQ2d at 1938. Consequently, we need not consider Bai's argument that Laiko has not failed to show reasonable diligence throughout period between 30 October 1997 and 19 December 1997. BOppBr 47-53.

Diligence can be shown by evidence of activity aimed at reducing the invention to practice, either actually or constructively, and/or by legally adequate excuses for inactivity. As explained in Griffith v. Kanamaru, 816 F.2d 624, 626, 2 USPQ2d 1361, 1362 (Fed. Cir. 1987):

> A review of caselaw on excuses for inactivity in reduction to practice reveals a common thread that courts may consider the reasonable everyday problems and limitations encountered by an inventor. See, e.g., Bey v. Kollonitsch, 806 F.2d 1024, 231 USPQ 967 (Fed. Cir. 1986)(delay in filing excused where attorney worked on a group of related applications and other applications contributed substantially to the preparation of Bey's application); Reed v. Tornqvist, 436 F.2d 501, 168 USPQ 462 (CCPA 1971) (concluding it is not unreasonable for inventor to delay completing a patent application until after returning from a three week vacation in Sweden, extended by illness of inventor's father); Keizer v. Bradley, 270 F.2d 396, 47 CCPA 709, 123 USPQ 215 (CCPA 1959)(delay excused where inventor, after producing a component for a color television, delayed filing to

> produce an appropriate receiver for testing the component); Courson v. O'Connor, 227 F. 890, 894 (7th Cir. 1915)("exercise of reasonable diligence * * * does not require an inventor to devote his entire time thereto, or to abandon his ordinary means of livelihood"); De Wallace v. Scott, 15 App.D.C. 157 (1899)(where applicant made bona fide attempts to perfect his invention, applicant's poor health, responsibility to feed his family, and daily job demands excused his delay in reducing his invention to practice); Texas Co. v. Globe Oil & Refining Co., 112 F.Supp. 455, 98 USPQ 312 (N.D. Ill. 1953)(delay in filing application excused because of confusion relating to war).

"[T]he activities relied upon as constituting diligence must have been directed to a reduction to practice of the invention in issue or to overcoming the difficulties that may have been in the way of a reduction to practice." C. Rivise & A. Caesar, I Interference Law and Practice § 182 (Michie Co. 1940). As with conception and reduction to practice, corroboration is required. Price v. Symsek, 988 F.2d 1187, 1196, 26 USPQ2d 1031, 1038 (Fed. Cir. 1993). It is necessary to account for the entire critical period, Griffith, 816 F.2d at 626, 2 USPQ2d at 1362, with evidence that is specific as to facts and dates. Gould v. Schawlow, 363 F.2d 908, 920, 150 USPQ 634, 644 (CCPA 1966).

Most of the testimony by the Laiko witnesses regarding diligence lacks date specificity, instead placing the acts during time periods bounded by dates apparently obtained from the documentary evidence. For example, LX 1059 is a Laser Science Inc. ("Laser Science") form which according to Dr. Baldwin and Ms. Diana Ferreira (of Laser Science) shows that on 26 November 1997, Dr. Baldwin contacted Laser Science about repairing a broken nitrogen laser (made by Laser Science[29]). Baldwin Decl. (LX 1074) ¶ 44; Ferreira Decl. (LX 1058) ¶ 4. This 26 November 1997 contact date and the 30 October 1997 conception date established by Dr.

[29] Burlingame Depo., LR 400, ll. 4-6.

Laiko's AP-MALDI proposal (LX 1041) appear to be the bases for Dr. Baldwin's and Dr. Burlingame's testimony that the discussions and events leading up to the laser repair inquiry occurred "[i]n the time period between October 31, 1997 and November 25, 1997." Baldwin Decl. (LX 1074) ¶¶ 36-40, 42, 43; Burlingame Decl. (LX 1075) ¶¶ 38-41. While the lack of specific dates about activities occurring prior to the critical period (beginning just before 19 December 1997) is immaterial, the testimony also lacks specificity regarding the activities which allegedly occurred during the critical period, as explained infra.

The events which allegedly led up to the laser repair inquiry are as follows. Drs. Baldwin and Burlingame testified that between 31 October and 25 November 1997, Dr. Burlingame approved the proposed AP-MALDI project and instructed Dr. Baldwin to oversee it, including providing scientific supervision as well as making sure that the appropriate resources were made available, and that Dr. Laiko was so informed. Baldwin Decl. (LX 1074) ¶37-38; Burlingame Decl. (LX 1075) ¶¶ 40-41. Dr. Baldwin testified that although the 30 October 1997 proposal suggested disassembling an AutoSpec magnetic sector mass spectrometer to obtain a laser for use in the AP-MALDI apparatus,

> I informed Dr. Laiko that he would not be authorized to disassemble an existing instrument, such as the AutoSpec magnetic sector mass spectrometer or other MALDI-TOF mass spectrometers, because such spectrometers were currently being heavily utilized and any disassembling may result in destruction of such existing instruments. I instead proposed that he use the spare nitrogen laser that was in possession of the UCSF Mass Spectrometry Facility, particularly by Mr. Walls.

Baldwin Decl. (LX 1074) ¶ 40. At that time, Walls was responsible for the management of resources in Dr. Burlingame's laboratory (Room C-18). Walls Decl. (LX 1079) ¶ 3. After it was discovered (by an unidentified person) that the laser was not working, Baldwin Decl. (LX 1074) ¶ 42; Walls Decl. (LX 1079) ¶ 9, Walls made an unsuccessful attempt to repair the laser, during which he conducted tests that persuaded him that the problem was in either the power supply or the plasma cartridge. Walls Decl. (LX 1079) ¶ 10.

Thereafter, on 26 November 1997, which is prior to Bai's 19 December 1997 conception date, Dr. Baldwin made the above-noted contact with Laser Science regarding repair of the laser. Ms. Ferreira, who is the "D.F." identified in that form as the "LSI CONTACT," explained that this contact date is established by the "11/26/97" date appearing after "CONTACT DATE" in the upper box on the Laser Science form (LX 1059), i.e., the box labeled "RETURN MATERIAL AUTHORIZATION." Ferreira Decl. (LX 1058) ¶ 4. Ms. Ferreira also explained that in accordance with customary and standard Laser Science procedures, the Return Material Authorization (RMA) number R1733 which appears on the form would have been given to Dr. Baldwin on the contact date for inclusion with the laser when shipped to Laser Science. Id.

The date when UCSF shipped the laser to Laser Science has not been established with any certainty but necessarily must have preceded Bai's 19 December 1997 conception date, which is also the date on which the laser was checked by a Laser Science technician, as indicated on the Laser Science form. Ferreira Decl. (LX 1058) ¶ 7. The technician's notes in the bottom box of the form identify the problem as a "Bad Pc," i.e., bad plasma cartridge, suggest replacing the junction box and HV cable as well, and estimated the cost of these repairs as $1,795 for the

plasma cartridge and $300 for the junction box and cable, yielding a total of $2,095. Ferreira Decl. (LX 1058) ¶ 7. Ms. Ferreira testified that in accordance with customary and routine practice, Laser Science would have contacted Dr. Baldwin on the same day as the evaluation (i.e., Friday, 19 December) or on the next business day (i.e., Monday, 22 December). Id. at 8. That this contact occurred no later than 23 December is evident from an e-mail (LX 1064) on that date from Dr. Baldwin to Marilyn Schwartz ("mars@itsa.ucsf.edu"), who was the Executive Director of the UCSF Mass Spectrometry Facility and was responsible for the financial management, operation, and maintenance of Dr. Burlingame's lab facilities. Schwartz Decl. (LX 1062) ¶ 3. The text of this e-mail, which was also copied to "alb@itsa.ucsf.edu" (presumably Dr. Burlingame) and "fredw @itsa.ucsf.edu" (presumably Mr. Wells) is as follows:

> Marilyn,
>
> There are several projects that need a laser other than one on an existing instrument. The prospective users include Victor Talrose who wants to measure UV absorption at the precise laser wavelength for his MALDI studies on explosives, Viktor [sic] Laiko who wants to develop a novel laser ionization source for Mariner 1," and Fred who wants to investigate laser ionization for the Concept. We have a nitrogen laser from Laser Science originally bought for Adrian that is not working. We sent it back for evaluation and they have told us it can be repaired for about $2,100. This should then be as good as a new laser that would cost about $6,400.
>
> Is this OK?
>
> Mike

Id. Dr. Baldwin testified that of the three projects identified in this e-mail, Dr. Laiko's had the highest priority. Baldwin Depo., LR 248, l. 11 to LR 249, l. 6. Bai does not dispute this contention.

On 23 December, the Tuesday before Christmas, Dr. Burlingame replied to Dr. Baldwin's above e-mail of that date by sending an e-mail reading "Mike/Marilyn - let's do it - Al." LX 1082; Burlingame Decl. (LX 1075) ¶ 46.

Bai contends that Laiko's decision to have the laser repaired by Laser Science is inconsistent with diligence because Laiko could have more quickly obtained an operative laser by (a) purchasing the necessary parts to have Mr. Walls repair the broken laser in-house, (b) disassembling one of the two mass spectrometers from Dr. Burlingame's laboratory which contained a laser, (c) borrowing a laser from another department or branch of the University of California, or (d) renting or purchasing a new or used laser, noting that the above-quoted e-mail estimated the cost of a new laser as only $6,400. BOppBr 57-62. This argument is based on the incorrect assumption that Laiko was required to choose the most expeditious course in attempting a reduce to practice. See I Interference Law and Practice § 196 ("The twentieth principle [of diligence] it is immaterial to the question of diligence that the inventor did not take the most expeditious course."). Accord, De Solms v. Schoenwald, 15 USPQ2d 1507, 1511 (Bd. Pat. App. & Int. 1990); Hoffman v. Schoenwald, 15 USPQ2d 1512, 1515 (Bd. Pat. App. & Int. 1990). See also Justus v. Appenzeller, 177 USPQ 332, 340 (Bd. Pat. Int. 1971)(citing Clement v. McQuarrie, 278 F. 587, 589, 1922 C.D. 92, 94 (App. D.C. 1922) ("Perhaps, as was observed by the Examiner of Interferences, they did not pursue the most expeditious course, but they were doing something toward the end in view from the date of conception until the cases were actually filed."); and Dickinson v. Swinehart, 263 F. 474, 476, 1920 C.D. 151, 153 (App. D.C. 1920) ("it may be that the drawings could have been made in a shorter time, and that every moment of the

inventor's time was not given to their preparation or work in connection therewith, but this was not necessary")). Furthermore, although Mr. Walls conceded that he was capable of replacing the plasma cartridge, power cable, and junction box, Walls Depo., LR 541, ll. 1-11, it was not unreasonable to defer to Laser Science's experience in repairing their own lasers. Also, disassembling one of the mass spectrometers in order to obtain a laser was not a reasonable course of action in view of the obvious risk of damage to the mass spectrometers. Baldwin Decl. (LX 1074) ¶ 40 Baldwin Depo., LR 251, ll.5-16. As a result, this is not a case where a party's decision not to use an available resource to achieve an actual reduction to practice was chiefly motivated by the desire to use the resource on a project having a higher priority. Cf. Griffith, 816 F.2d at 629, 2 USPQ2d at 1364 (Fed. Cir. 1986)(holding of nondiligence based in part on fact that "the aminocarnitine project was second and often third priority in laboratory research as well as the solicitation of funds"); Hudson v. Giuffrida, 328 F.2d 918, 923, 140 USPQ 569, 573 (CCPA 1964) (delay in testing invention was inconsistent with reasonable diligence because it was "a 'deliberate delay' motivated primarily by Dr. Janes' desire not to interfere with equipment then in use on other projects").

Bai also argues (BOppBr 57-58) that in addition to the lasers contained in the mass spectrometers, Dr. Burlingame's laboratory had other operative lasers being used on other projects which could have been used instead in Laiko's AP-MALDI project, citing Dr. Burlingame's testimony that other lasers were made available to "Talrose" and "Fred," who were mentioned in Baldwin's 23 December e-mail along with Dr. Laiko as prospective users of the broken nitrogen laser, should it be repaired. Burlingame Depo., LR 341, l. 22 to LR 342, l. 16.

However, Dr. Burlingame did not explain when these other lasers were made available to Talrose and Fred, which leaves open the possibility that they were not obtained until after the broken laser was repaired by Laser Science and returned to UCSF in February 1998.

For the foregoing reasons, we hold that it was reasonable for Laiko to decide to obtain an estimate of the cost of repairing the laser, with the result that Dr. Baldwin's 26 November 1997 repair inquiry to Laser Science and the subsequent shipment of the laser from UCSF to the Laser Science facility (located in Massachusetts), which necessarily occurred prior to Laser Science's 19 December 1997 repair estimate, are sufficient to establish that reasonable diligence toward an actual reduction to practice of the AP-MALDI invention began just prior to Bai's 19 December 1997 conception date.

Inasmuch as 19 December was a Friday, Dr. Burlingame's above-noted e-mail to Dr. Baldwin on 23 December (Tuesday) authorizing the laser repair was reasonably prompt.[30] The UCSF Mass Spectrometry Facility was closed on 24 December (Wednesday), 25 December (Thursday), 27 December (Saturday), 28 December (Sunday), 31 December (Wednesday), and 1 January (Thursday). Baldwin Decl. (LX 1074) ¶ 52. In addition, Dr. Baldwin, to whom Dr. Burlingame's authorization to proceed with laser repair apparently was directed, did not work on 26 December, the British holiday of "Boxing Day." Baldwin Depo., LR 290, ll. 11-14. Under these circumstances, it was reasonable for Dr. Baldwin to wait until 2 January (Friday) to

[30] Dr. Burlingame's testimony that he "would be amazed" if Ms. Schwartz did not forward the approval to Laser Science on 23 December, Burlingame Depo., LR 400, l. 17 to LR 401, l. 9, is unsupported by her declaration testimony (LX 1062) and contradicted by Denny's testimony, both discussed infra.

execute a Materiel Management Unit Request for Order (LX 1066)(hereinafter "Request for Order") requesting that the laser be repaired by Laser Science and including the notation "Estimated cost $2,100." Baldwin Decl. (LX 1074) ¶ 53. Then, in accordance with routine practice, he submitted the order to Ms. Schwartz on the same or on the following Monday (5 January). Id. Ms. Schwartz received the Request for Order on 2 January (Friday), 5 January (Monday), or 6 January (Tuesday), altered it by changing "Estimated cost" to "not to exceed," and then submitted it within one or two working days to the Materiel Management Unit in accordance with routine practice. Schwartz Decl. (LX 1062) ¶ 10. As indicated by the notations "MRD" and "01/06/98" printed in the lower left-hand corner of the Request for Order, it was processed on that date by Matthew Denny, the Senior Storekeeper of the Materiel Management Unit. Denny Decl. (LX 1068) ¶¶ 3, 6. On that date, it was assigned number DP8964R231, which appears in the left-hand bottom corner. Id.

The foregoing evidence demonstrates reasonable diligence from just prior to 19 December 1997 up to 6 January 1998.

Denny's testimony that he contacted Laser Science on either 6 or 7 January in accordance with routine and ordinary practice, Denny Decl. (LX 1068) ¶ 7, is unconvincing because it is contradicted by the Request for Order and by the Laser Science internal "Order" document

(LX 1060)(hereinafter "Laser Science internal order"), both of which give the date the repair order was given to Laser Science as 14 January 1998.[31] Consequently, there is an unexplained seven-day delay in placing the repair order with Laser Science. As explained below, there is also another, longer period of unexcused inactivity.

The estimated date for delivery of the repaired laser was given as 15 March 1998 in the Request for Order (LX 1066) and as 18 March 1998 in the Laser Science internal order (LX 1060). However, the repair was completed no later than 17 February 1998, when the repaired laser was shipped from Laser Science to Dr. Baldwin via UPS Ground, the method of shipment specified in the Request for Order and in the Laser Science internal order, in which "6 UPS" means UPS Ground. Ferreira Decl. (LX 1058) ¶ 9. Ms. Ferreira explained that UCSF would have been advised at the time of the order that UPS Ground shipments to California typically took five to seven business days. Ferreira Decl. (LX 1058) ¶ 12. Bai contends that Laiko's request for shipment via UPS Ground shows a lack of reasonable diligence because for as little as ninety-five dollars less the cost spent for shipping via UPS Ground, Laiko could have specified shipment by an overnight courier. BOppBr 65. This argument fails because an inventor is not required to choose the most expeditious course. Interference Law and Practice

[31] This is also the day on which Drs. Laiko, Burlingame, and Baldwin met and "discussed the status of the laser repair, further resources for the AP-MALDI set up, including its organization." Laiko Decl. (LX 1037) ¶ 53; Baldwin Decl. (LX 1074) ¶ 54. This meeting is noted in LX 1077, the 14 January 1998 page of Dr. Burlingame's personal calendar, as "Victor Laiko/Mike Baldwin."

§ 196; De Solms, 15 USPQ2d at 1511; Hoffman, 1512 USPQ2d at 1515; Justus, 177 USPQ at 340; Clement, 278 F. at 589, 1922 C.D. at 94; Dickinson, 263 F. at 476, 1920 C.D. at 153.

Laiko has not offered any evidence, such as a tracking report, to conclusively establish when the repaired laser was received by Laiko. Instead, Laiko relies on Ms. Ferreira's testimony that UPS Ground shipments from Laser Science to California typically took from five to seven business days to establish a receipt date of 24-26 February 1998 (Tuesday-Thursday). Ferreira Decl. (LX 1058) ¶ 12. Dr. Baldwin's and Mr. Walls' testimony that the laser was received during this three-day period, Walls Decl. (LX 1079) ¶ 16; Baldwin Decl. (BX 1074) ¶¶ 55-60, 62-64, presumably is based on Ms. Ferreira's estimate of the delivery time, as neither was able to explain the basis for this range of dates. Baldwin Depo., LR 254, ll. 16-23; Walls Depo., LR 562, l. 14 to LR 564, l. 7. In any event, because testimony that an inventive activity occurred during a stated period is construed against the proponent insofar as the date is concerned, we are crediting Laiko with a receipt date of 24 February 1998, the earliest date in the period. Cf. Oka v. Youssefyeh, 849 F.2d 581, 584, 7 USPQ2d 1169, 1172 (Fed. Cir. 1988)("In dealing with a reduction to practice, the court in Haultain v. DeWindt, 254 F.2d 141, 117 USPQ 278 (CCPA 1958), stated, 'Further, where testimony merely places the acts within a stated time period, the inventor has not established a date for his activities earlier than the last day of the period.' Id. at 142, 117 USPQ at 279. That rule is equally appropriate in establishing a date of conception, nor does Youssefyeh dispute Oka's position that 'the last week in October' means October 31.").

The testimony concerning activities from the date of receipt of the repaired laser up to 9 March lacks specificity as to dates and acts and also seems to reflect the witnesses's deductions about what must have occurred rather than their recollection of what occurred. For example, Dr. Baldwin testified: "In the time period between February 24-26, 1998, I informed Dr. Laiko and/or Mr. Walls that the repaired spare nitrogen laser had arrived back to the UCSF Mass Spectrometry Facility. To the best of my recollection, Dr. Laiko immediately took possession of the nitrogen laser upon receipt of this notification." Decl. (LX 1037) ¶ 58. However, Dr. Baldwin admitted on cross-examination that he had no specific recollection of informing Dr. Laiko that the laser had been returned to UCSF, instead explaining that he knew Dr. Laiko was "extremely anxious to get his hands on this laser" and that "it's inconceivable that it would have been sitting around in a box without him getting his hands on it." Laiko Depo., LR 254, ll. 4-15. Walls, on cross-examination, Walls Depo., LR 562, ll. 8-13, likewise admitted that he had no specific recollection of informing Dr. Laiko that the repaired laser had been received, as he asserted in his

declaration testimony that: "In the time period between February 24-26, 1998, either Dr. Baldwin or myself informed Dr. Laiko that the repaired spare nitrogen laser had arrived back to the UCSF Mass Spectrometry Facility. To the best of my recollection, Dr. Laiko immediately took possession of the nitrogen laser upon receipt of this notification." Walls Decl. (LX 1079) ¶ 19.

Consequently, there is inadequate corroboration for Dr. Laiko's claim that he took possession of the laser as soon as it was received by UCSF. Laiko Decl. (LX 1037) ¶ 54.

Dr. Laiko's testimony that by the end of the day on which he received the laser, he had probably completed the tasks of measuring the beam intensity on an energy meter to confirm that it was operational and adjusting the laser to make sure it was operating within specifications, Laiko Decl. (LX 1037) ¶ 56, also lacks corroboration.

Dr. Laiko further testified:

> 55. In the time period between February 24-26, 1998 (on the day I took possession of the laser) and March 9, 1998, I worked on the construction of the AP-MALDI apparatus. During this time, I was also running routine atmospheric pressure ESI and LCMS tests on Mariner for biological samples. While conducting such tests, I typically had about 3 to 6 hours of free time each work day. During this free time as well as during work day nights, I proceeded to design, build, and assemble the AP-MALDI apparatus piece by piece on a daily basis. As I was excited about this project, throughout this time period I spent my spare time every work day on the AP-MALDI system.

Laiko Decl. (LX 1037) ¶ 55. These alleged activities included:

(a) discussing with Dr. Baldwin and Mr. Walls the risks posed by exposure to the invisible infrared radiation and the need for protective eye wear, id. at ¶ 57;

(b) testing Dr. Laiko's own prescription glasses and a pair of polycarbonate protective glasses from the UCSF Mass Spectrometry Facility using the laser and an energy meter, id.;

(c) retesting of the laser output and checking the laser stability, id.;

(d) gathering together (by 3 March) some of the components needed for the AP-MALDI apparatus, including a lens and some lens support components allegedly obtained from Walls, id. at ¶ 58;

(e) executing (on 6 March) a purchase order (LX 1048) for six pairs of ECLIPSE™ protective glasses from Cole-Parmer Instrument Co. ("Cole-Parmer"), id. at ¶ 59;

(f) constructing a lens support and attaching it to the laser housing, id. at ¶ 60;

(g) constructing an "optical bench" for the laser using books and furniture, id. at ¶ 61;

(h) obtaining an XY translator table for the supporting laser by separating a microscope from its XY translator table and modifying the table to support the laser, id. at ¶ 62;

(i) fabricating a target assembly for supporting the sample, id. at 63; and

(j) pre-assembling the major components of the AP-MALDI system to verify that they could be quickly disassembled so as to allow for the next day's ESI (electrospray ionization) experiments, id. at ¶ 64.

The amount of time spent identifying and ordering the ECLIPSE™ glasses has not been established and even if it had could not be counted toward diligence in the absence of evidence corroborating a belief that these glasses were believed to be necessary for conducting an actual reduction to practice of the AP-MALDI apparatus. Cf. I Interference Law and Practice § 182 ("[T]he activities relied upon as constituting diligence must have been directed to a reduction to practice of the invention in issue or to overcoming the difficulties that may have been in the way of a reduction to practice."). That these glasses were not considered essential for an actual reduction to practice of the AP-MALDI apparatus is evident from the fact that these glasses were not even ordered from Cole-Parmer by the Materiel Management Unit until 13 March 1998, the day before the actual reduction to practice occurred, LX 1048; Schwartz Decl. (LX 1062) ¶¶ 13-14, at which time the delivery date was estimated to be 19 March 1998.

As for the other activities mentioned above, even assuming for the sake of argument that they necessarily must have occurred as part of Dr. Laiko's preparation for an actual reduction to

practice, there is no testimony or other evidence corroborating specific dates for these acts, which

the testimony suggests probably took no more than about ten hours to perform.[32] For example, although Dr. Baldwin testified that he "observed Dr. Laiko designing, building, and assembling the AP-MALDI apparatus piece by piece on a daily basis" "[i]n the time period between February 24-26, 1998, and March 11, 1998," Baldwin Decl. (LX 1074) ¶ 59, he admitted on cross-examination that he could not recall a specific thing that he saw Dr. Laiko do on a specific day between 22-24 February and 11 March 1998, Baldwin Depo., LR 256, ll. 1-7, or recall the order in which Dr. Laiko built the lens support, modified the XY translator table, and constructed the target assembly. Id. at LR 257, ll. 10-14.[33] He also admitted that there were some days that he did not see Dr. Laiko working on the AP-MALDI project. Baldwin Depo., LR 258, ll. 6-9. The similar declaration testimony by Walls and Dr. Burlingame (in which they gave the last day

---

[32] Construction of the lens support, shown in the 2003 photograph before us as LX 1049, Baldwin Decl. (LX 1074) ¶ 62, was estimated by Dr. Baldwin to have taken no more than a few hours. Baldwin Depo., LR 261, l. 17 to LR 262, l. 2. (Mr. Walls does not know how long this task took. Walls Depo., LR 569, l .20 to LR 571, l. 12.) Detaching the microscope from its XY translator table -- shown in the 2003 photograph before us as LX 1069, Baldwin Decl. (LX 1074) ¶ 63 -- was estimated by Dr. Baldwin to have taken no more than a few hours, Baldwin Depo., LR 262, ll. 3-14, and by Mr. Walls to have taken less than one hour. Walls Depo., LR 571, l. 20 to LR 572, l. 14. While an estimate of the time required to make the AP-MALDI target shown in the two 2003 photographs before us as LX 1051, Baldwin Decl. (LX 1074) ¶ 64, was not given by Dr. Laiko, Dr. Baldwin, or Mr. Walls, this task, too, would appear to have taken no more than a few hours.

[33] In view of this admission, we give no weight to Dr. Baldwin's declaration testimony that the XY translator table was modified by 6 March. Baldwin Decl. (LX 1074) ¶ 63.

of the period given as 13 March and 16 March, respectively, Walls Decl. (LX 1079) ¶ 20; Burlingame Decl. (LX 1075) ¶ 49) likewise failed to hold up under cross-examination, as they were unable to recall specific work by Dr. Laiko on the AP-MALDI apparatus or when that work occurred. Burlingame Depo., LR 411, l. 3 to LR 415, l. 10; Walls Depo., LR 566, ll. 7-9. Furthermore, Dr. Baldwin testified that during the time period in question, Walls was a part-time employee and thus not at work every day, Baldwin Depo., LR 222, ll. 4-12, thereby contradicting Walls's claim that he observed Dr. Laiko working on the AP-MALDI project "on a daily basis." Walls Decl. (LX 1079) ¶ 20.

Thus, Laiko's evidence regarding Dr. Laiko's AP-MALDI efforts from receipt of the repaired laser to 9 March lacks the specificity as to acts and dates that is required to establish reasonable diligence. Gould, 363 F.2d at 920, 150 USPQ at 644. See also Kendall v. Searles, 173 F.2d 986, 993, 81 USPQ 363, 369 (CCPA 1949)(testimony by inventor's wife and son that the inventor from the time of conception worked continuously on development of invention "was not specific as to dates and facts" and therefore "does not constitute the kind of corroboratory evidence required to establish appellant's diligence during the critical period").

As already noted, Laiko seeks to excuse the limited time Dr. Laiko spent on AP-MALDI from receipt of the repaired laser and up to 9 March on the ground that he was required to spend most of his regular working hours on other projects, as he indicated in his above-quoted testimony that his other duties prevented him from spending more than three to six hours per day on AP-MALDI. Laiko Decl. (LX 1037) ¶ 55. This testimony is amply corroborated by the other witnesses. Specifically, Dr. Baldwin testified that "his [Dr. Laiko's] duties involved him in

[other] activities most -- most of the day most days. He would have a certain amount of free time when he could do some of these activities," Baldwin Depo., LR 262, ll. 19-22, and that Dr. Laiko was essentially limited to working on the AP-MALDI project at night and on the weekends for the following two reasons:

> A. . . . One is his duties were -- were primarily to carry out LCMS experiments, and the second reason is that those LCMS experiments were on the Mariner mass spectrometer that he was requiring for the AP-MALDI experiments, and specifically that was operated with electrospray ionization; therefore, it was impossible to do anything with the ionization region while it was in use during the day.

Baldwin Depo., LR 257, l. 23 to LR 258, l. 5. Likewise, Dr. Burlingame explained that Dr. Laiko was hired to operate the Mariner 1 mass spectrometer and get data for people on a LCMS, Burlingame Depo., LR 421, ll. 15-19, and also testified:

> A. Yes, I told Laiko -- maybe I haven't said this before, but, you know -- that he could use time in other than the 40-hour week to devote as much additional time as he -- as he wished to trying to make AP-MALDI work, but that I didn't want that to interfere with this kind of activity.

Burlingame Depo., LR 423, l. 21 to LR 424, l. 1. Furthermore, a 12 March 1998 e-mail (LX 1083) to Dr. Burlingame from a David Maltby, who did not testify, complained that Dr. Laiko was spending too much time on the AP-MALDI project, which the e-mail refers to as interfacing the laser with the Mariner 1:

> Victor has been doing an excellent job running Mariner 1 and getting data for people on LCMS. He is not spending enough time, however, in familiarizing himself with the intricacies of protein digests and data interpretation. Kati has given him some digests to run and interpret but he hasn't followed through on it yet. He also is being laggard in his running of the samples from Les in Almira Correia's lab. I have to keep on him to take care of those in a timely fashion. Victor is spending time on Mariner 1 trying to interface the laser to it for mass

> analysis and some time trying to set up electrochromatography as well. Are these projects important enough to us to take up this much instrument time? I am not aware of the possibilities in the Laser interfacing but the EC work may be useful. My fear is that he is in a "this is fun to play with" mode which is good for him but not so good for us. I think what we most need, is improvements in LCMS of gel digests, specifically cutting down analysis time so that we can run more samples in less time. I think there are ways of doing this that don't involve such speculative work as Victor is engaged in now. I would like to get Victor working on ways to shorten the LC run times and column reequilibration times so that we can have shorter LC runs. If you have some time in the next few days, perhaps we can talk about these items.

Dr. Burlingame responded by e-mail: "OK I understand and agree with your priorities. I'll try tomorrow." LX 1083.

However, because the foregoing testimony unambiguously demonstrates a conscious decision on behalf of Dr. Laiko's employer to rank AP-MALDI below LCMS and possibly electrochromatography insofar as Dr. Laiko's time and laboratory resources (e.g., Mariner 1) were concerned, it defeats rather than supports Laiko's claim of reasonable diligence between receipt of the repaired laser (24 February) and 9 March. See Griffith, 816 F.2d at 629, 2 USPQ2d at 1363-64 (Griffith held non-diligent in part because project at issue was given second and often third priority in laboratory research); Hudson, 328 F.2d at 923, 140 USPQ at 573 ("we agree with the board that 'a test in a metal tube would have been of practical value in the first instance'; that failure to so test was 'inconsistent with the exercise of reasonable diligence'; and that such failure to test was a 'deliberate delay' motivated primarily by Dr. Janes' desire not to interfere with equipment then in use on other projects."); Watkins v. Wakefield, 443 F.2d 1207, 1210, 170 USPQ 274, 275 (CCPA 1971)(distinguishing facts from those in Hudson, characterized as a case which "involved a situation where the inventor or his

representatives deliberately refrained from making an adequately meaningful test readily within their immediate abilities solely on the ground on convenience"). See also Wu v. Davis, 167 USPQ 467, 473 (Bd. Pat. Int. 1968)(a desire not to interfere with equipment already in use is not a valid excuse for inactivity). Inasmuch as working on the AP-MALDI apparatus was one of Dr. Laiko's employment responsibilities, albeit one having a low priority, the principle that an inventor need not surrender or neglect his regular employment in order to show reasonable diligence, Gould, 363 F.2d at 919, 150 USPQ at 643, does not apply. See Donald Chisum, 3 Patents § 10.07[4][c] (Rel 82-3/02)("Naturally, if work on an invention is a part of the inventor's employment, employment is not such an excuse for inactivity or to slow the pace of activity.").

The absence of sufficient relevant activity or an acceptable excuse for inactivity during the period of 24 February through 9 March 1998, and coupled with the one-week period of unexplained inactivity preceding the 14 January 1998 laser repair order to Laser Science are, in our view, sufficient to defeat Laiko's claim of diligence and with it Laiko's case for priority. See Ireland v. Smith, 97 F.2d 95, 99-100, 37 USPQ 807, 811 (CCPA 1938) (held not diligent for failing to account for period of three and one-half weeks). Consequently, we need not consider whether there is adequate corroboration for the activities Dr. Laiko allegedly performed during 10-13 March, the four days immediately preceding the admitted actual reduction to practice, which include: (a) pre-testing the AP-MALDI apparatus on 10 March by assembling and disassembling the entire apparatus, including removing and replacing the ESI input apparatus, Laiko Decl. (LX 1037) ¶ 65; (b) assembling the AP-MALDI apparatus on 11 March and using it on that day to conduct an unsuccessful test with a matrix of α-cyano and an analyte mixture of

CZE, id. at ¶ 66; conducting additional unsuccessful tests on 12 March, id. at ¶ 67; and making modifications to the lens support on 13 March. Id. at ¶ 68.

In view of Laiko's failure to demonstrate reasonable diligence throughout the entire critical period, judgment on the issue of priority is being entered in favor of junior party Jian Bai, Steven Fischer, and J. Michael Flanagan and against senior party Victor V. Laiko[34] in a separate paper mailed herewith entitled "JUDGMENT UNDER 37 CFR 1.658."

JOHN C. MARTIN Administrative Patent Judge	)	
JAMESON LEE Administrative Patent Judge	)	BOARD OF PATENT APPEALS AND INTERFERENCES
SALLY C. MEDLEY Administrative Patent Judge	)	

[34] As noted supra, the caption of the judgment paper reflects the redeclaration of the interference to delete Dr. Burlingame as an inventor, thereby leaving Dr. Laiko as the sole inventor.

JCM/jcm

cc (via Federal Express):

Attorney for Bai:

Jerry D. Voight
FINNEGAN, HENDERSON, FARRABOW,
GARRETT & DUNNER
1300 I Street, N.W., Suite 700
Washington, D.C. 20005-3315

Attorney for Laiko:

Edward J. Keeling
TOWNSEND AND TOWNSEND AND CREW LLP
Two Embarcadero Center, 8th Floor
San Francisco, CA 94111-3834

Enclosures:

McGraw-Hill Dictionary of Scientific and Technical Terms 75, 147, 1218 (5th ed., 1994)

The American Heritage Dictionary of the English Language 83 (New College Edition, 1975).

Gessner G. Hawley, The Condensed Chemical Dictionary 545-46 (8th ed, 1971)